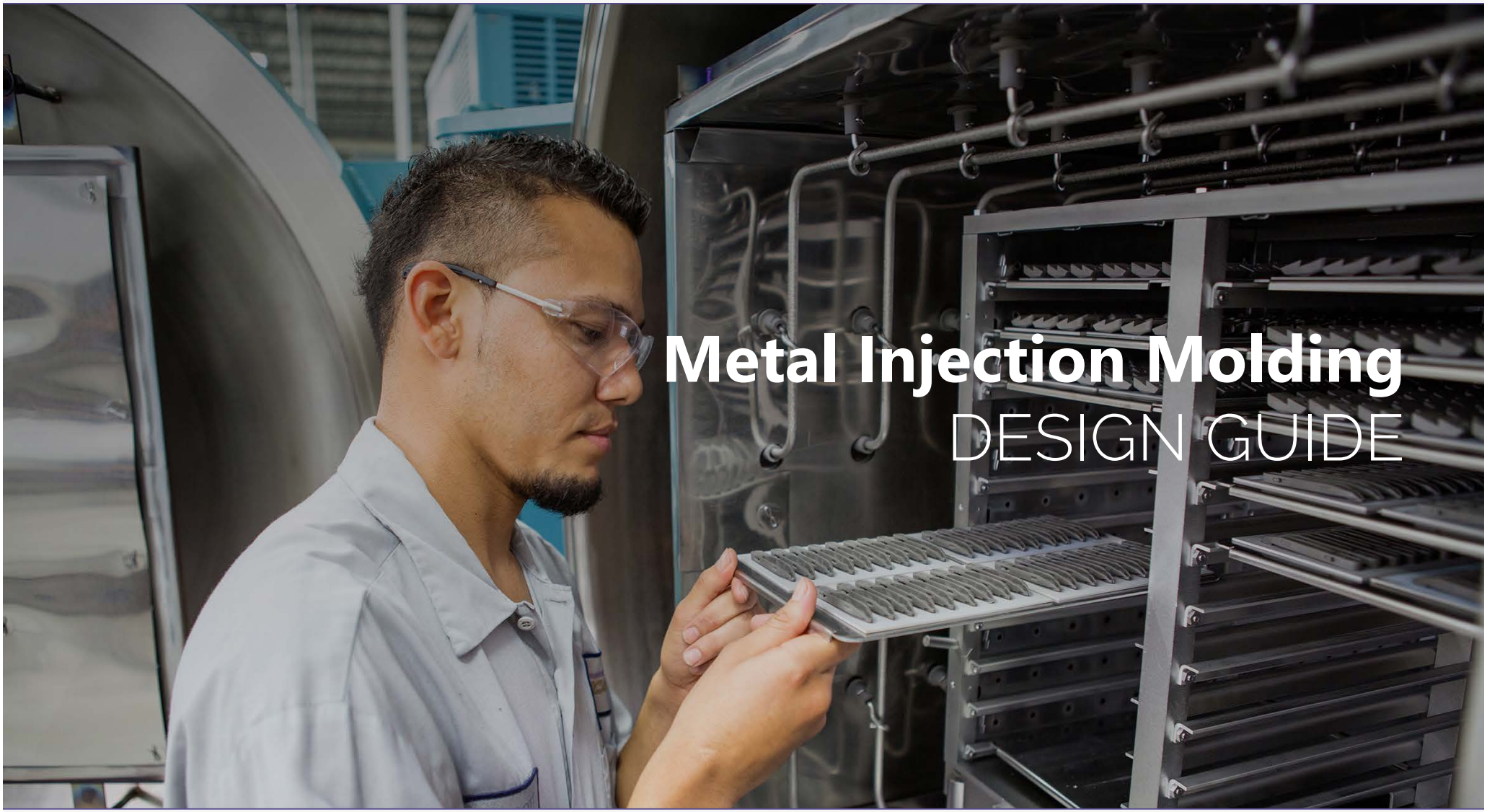

Metal Injection Molding
DESIGN GUIDE

CONTENTS

MIM application 04

MIM process 10

MIM design criteria:
- Uniform wall thickness, coring, and mass reduction 14
- Sintering supports 18
- Draft – where and when 24
- Corner breaks and fillets 26
- Holes and slots 30
- Undercuts – external and internal 33
- Threads 35
- Ribs and webs 37
- Knurling, lettering and, logos 39
- Gating – types and location 41
- Sink and knitlines 47
- Minimum and maximum wall thickness 49
- Flash and witness lines 51
- Interchangeable mold inserts 57

Dimensional tolerances 59

THE DESIGN FREEDOM OF MIM

MIM offers greater design freedom than many other production processes by freeing designers from the traditional constraints associated with trying to shape stainless steel, nickel iron, copper, titanium, and other metals.

The advantages of MIM:

- MIM makes it possible to integrate and consolidate several components into a single molded piece—reducing the need to work with several manufacturers and decreasing processing and assembly costs.

- The combination of plastic injection molding and powdered metallurgy means designers are free from the traditional constraints of trying to shape stainless steel, nickel iron, copper, titanium, and other metals.

- Since injection molding is employed as the shape forming process step in MIM, part designs can avoid the limitations of standard metalworking processes.

- Texture, knurling, threads, lettering, and company logos can all be incorporated into the mold which significantly lowers tooling costs

- A very effective way of utilizing MIM's design freedom is to combine multiple components in an assembly into a single MIM component. The resulting MIM component is stronger, more cost effective, and is produced closer to the original design intent than the assembly.

The following is a list of general characteristics that describe good MIM applications:

Some parts:

- lengths to 7 inches
- wall thickness to 0.5 inches
- weights above 100 grams
- volumes as low as 5.000 annually

Most parts:

- lengths less than 3 inches
- wall thickness from 0.04 to 0.12 inches
- weights under 60 grams
- volumes of 100.000 > 100.000.000 annually

Part consolidation

Fig. 1 illustrates the conversion of a four component assembly into one MIM component. This eliminates three assembly steps and related costs, plus reduces the number of parts that have to be purchased, tracked, and managed through inventory.

The resulting MIM component is stronger, more cost effective, and is produced closer to the original design intent.

1

Typical Assembly of Multiple Parts

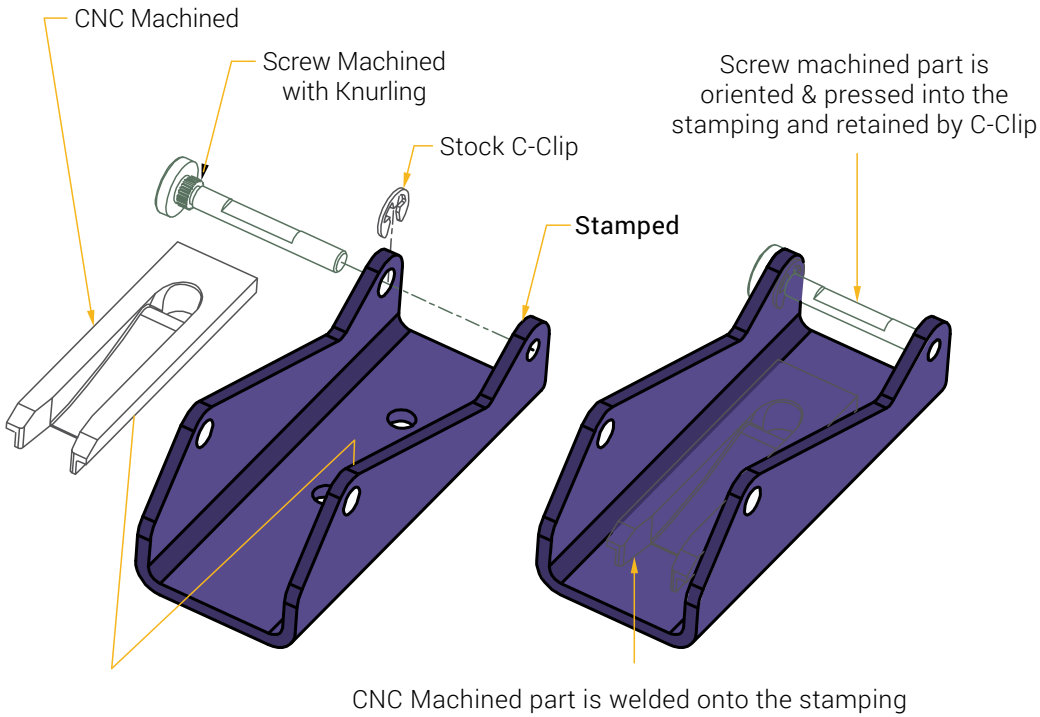

Single MIM Component

The MIM process combines the 4 components into one single part eliminating 3 assembly operations while maintaining part function and design intent

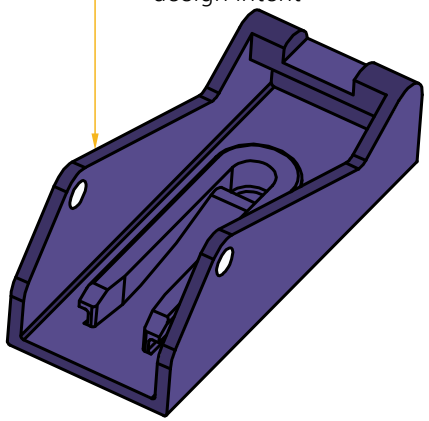

MIM makes financial sense

MIM represents the most effective manufacturing approach for small intricate metal components that are required in medium to high volumes. One approach to defining a candidate application is to imagine how many machining operations would be required to produce the shape if it were to be machined. In general, MIM is the preferred process for component designs where machining adds incremental cost for each machined feature. In contrast, the molding process used in MIM adds very little or no incremental cost for each molded feature. Fig.2 provides a cost versus part complexity comparison of MIM against other manufacturing technologies.

MIM in action

Today, MIM is used to produce a wide range of products across many industries including automotive fuel and ignition systems, aerospace and defense systems, cellular telephones, dental instruments and braces, electronic heat sinks and hermetic packages, electrical connector hardware, industrial tools, fiber optic connectors, fluid spray systems, hard disk drives, pharmaceutical devices, power hand-tools, pumps, surgical instruments, and sporting equipment.

2

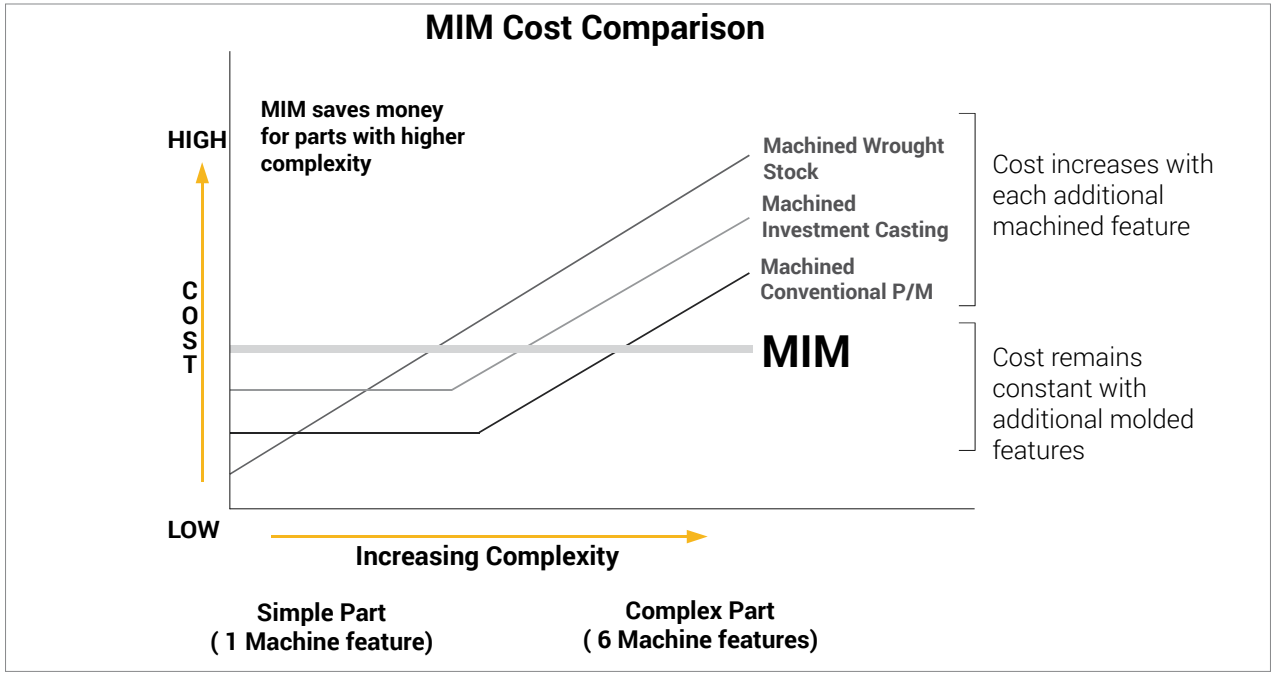
MIM Cost Comparison
MIM saves money for parts with higher complexity
HIGH
COST
LOW
Machined Wrought Stock
Machined Investment Casting
Machined Conventional P/M
MIM
Cost increases with each additional machined feature
Cost remains constant with additional molded features
Increasing Complexity
Simple Part (1 Machine feature)
Complex Part (6 Machine features)

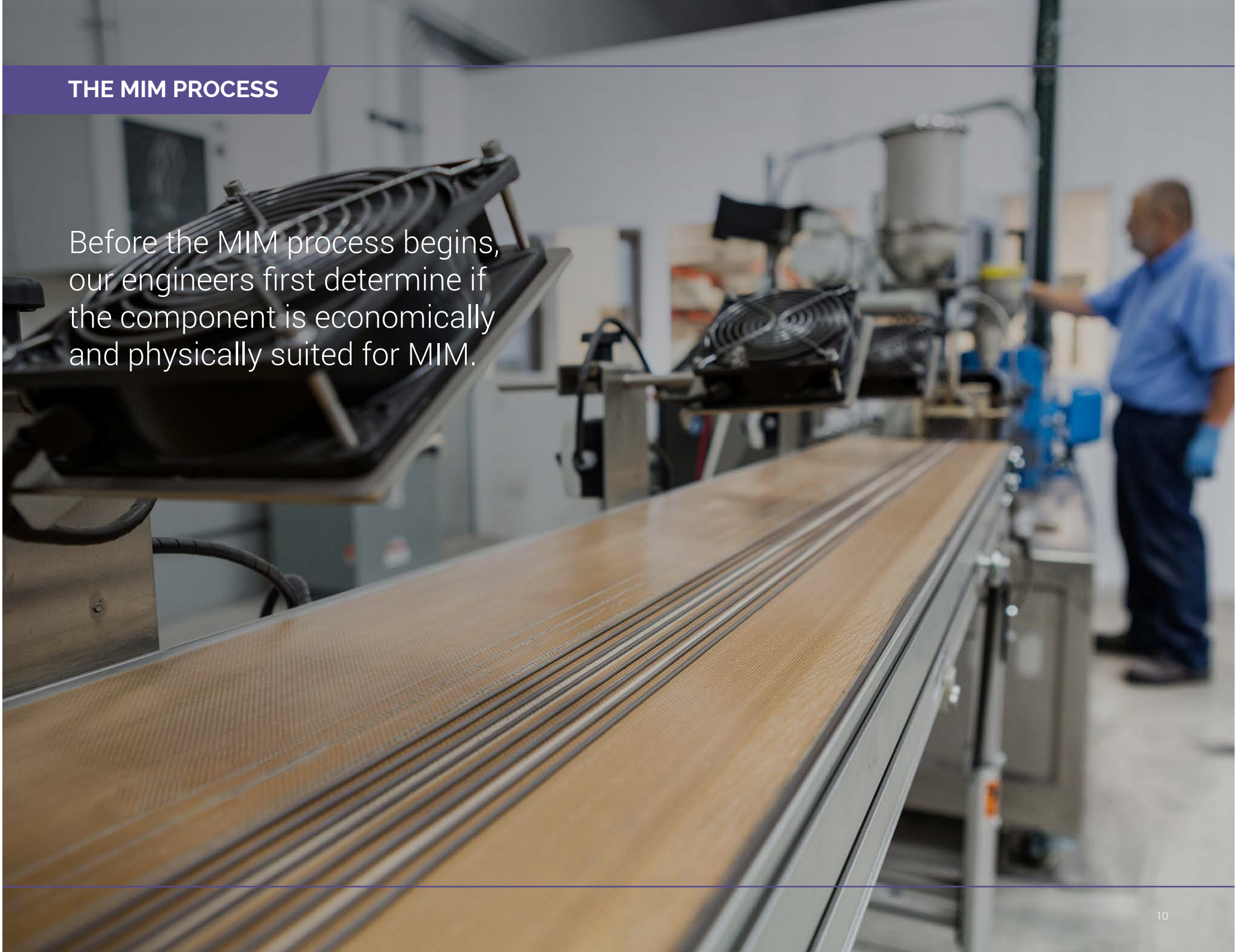

Before the MIM process begins, our engineers first determine if the component is economically and physically suited for MIM.

Step 1: Feedstock

Very fine metal powders usually (<15 microns) are mixed with a primary paraffin material and a secondary thermoplastic polymer. Together they act as binders. Unlike standard powder metallurgy, which can achieve only 80-90% of theoretical density, MIM results in 95-100%. This means we can achieve close tolerances and reduce costs by producing small, complex parts over high production runs.

Step 2: Molding

The feedstock is fed into our MIM molding equipment, then heated and injected into a mold cavity under high pressure. Our tooling can produce extremely complex shapes and allow for shorter cycle times. Once molded, the component is referred to as a “green” part. Its geometry is identical to that of the finished piece, but to allow for shrinkage during the sintering phase, it’s about 20% larger in size than the finished component will be.

Step 3: Debinding

Binder removal or “debinding” involves a controlled process to remove most of the binders. The process removes the binders and prepares the part for the final step – sintering. Once debinding is complete, the component is referred to as “brown”.

Step 4: Sintering

The “brown” part is held together by a small amount of the binder, and is very fragile. Sintering eliminates the remaining binder and gives the part its final geometry. During sintering, the part is subjected to temperatures near the melting point of the material. The entire sintering process takes 15-20 hours.

MIM DESIGN CRITERIA

As injection molding is employed as the shape forming process step in MIM, part designs can avoid the limitations of traditional metalworking processes. With MIM, as is the case with plastic injection molding, design engineers have the freedom of starting with a “clean slate”, and building up their component geometry by placing material only where it’s needed for function and strength.

This benefits both the MIM process and the customer. The very fine metal powders used in the MIM process are expensive, and any opportunity to limit the amount of material required in a component helps minimize the final MIM part cost.

Uniform wall thickness

Maintaining a uniform wall thickness throughout a component reduces the likelihood of molding process flaws, thus improving the overall part quality, cosmetics, and the resulting dimensional tolerances that the MIM process can provide.

If, however, varying wall thickness cannot be avoided, a gradual transition between differing wall thicknesses should be provided and every attempt should be made to avoid abrupt changes. Fig. 3 provides a recommended wall thickness transition ratio for those situations when uniform walls cannot be achieved.

3

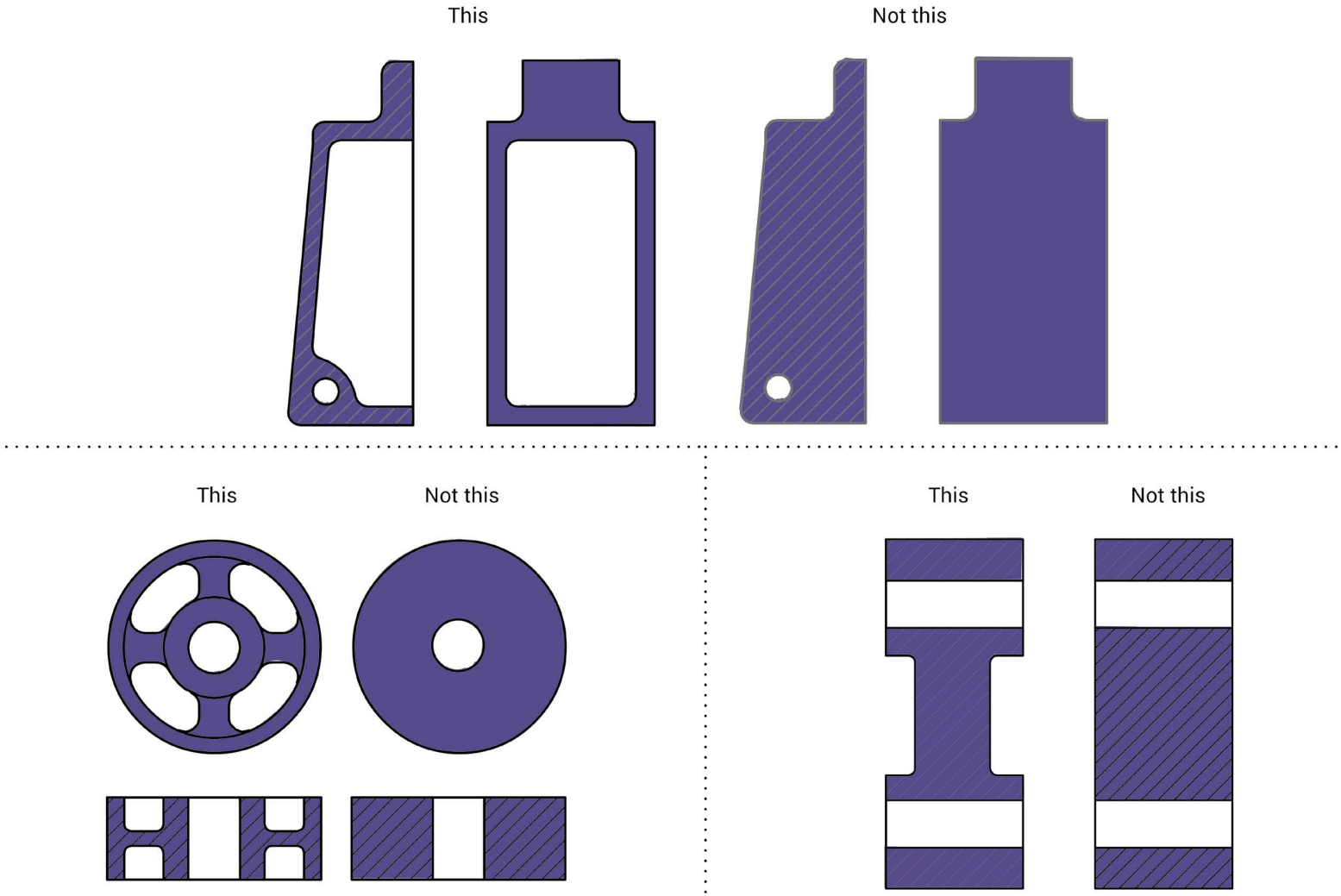

Coring

Coring can be done either parallel or perpendicular to the parting line. Fig.4 illustrates both types of coring, Coring perpendicular to the parting line (Section A-A) can be produced with cores, which are fixed features on either half of the mold. Coring parallel to the parting line (Section B-B) can be produced with slides, which are moving components in a mold. The slides are usually placed at the parting line and move parallel to it. Slides add complexity and costs to a mold, so if the design permits, coring perpendicular to the parting lines is the preferred approach.

Remember, when designing a MIM part, or when coring out an existing design, maintaining a consistent uniform wall thickness throughout the part is the primary objective.

4

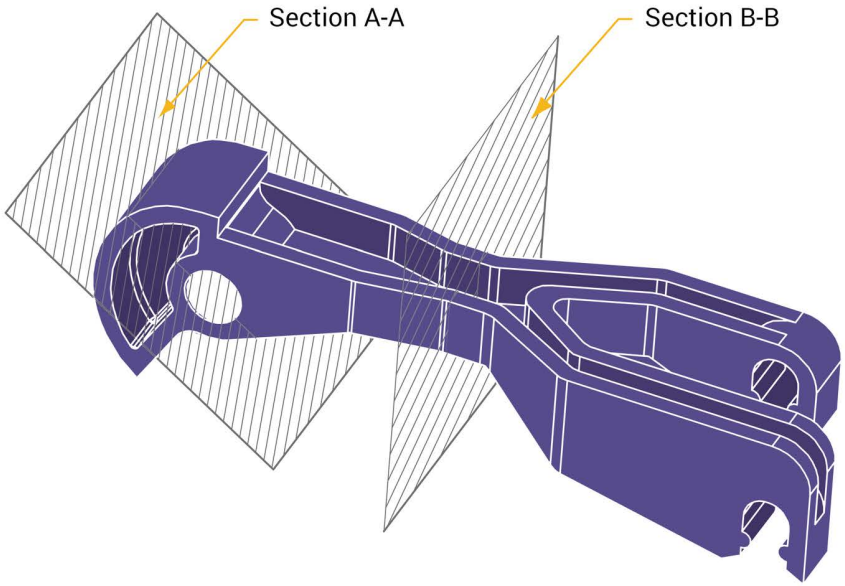
Section A-A
Section B-B

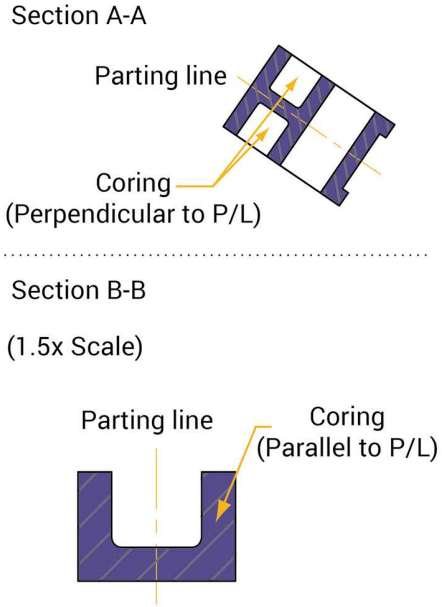
Section A-A
Parting line
Coring
(Perpendicular to P/L)
Section B-B
(1.5x Scale)
Parting line
Coring
(Parallel to P/L)

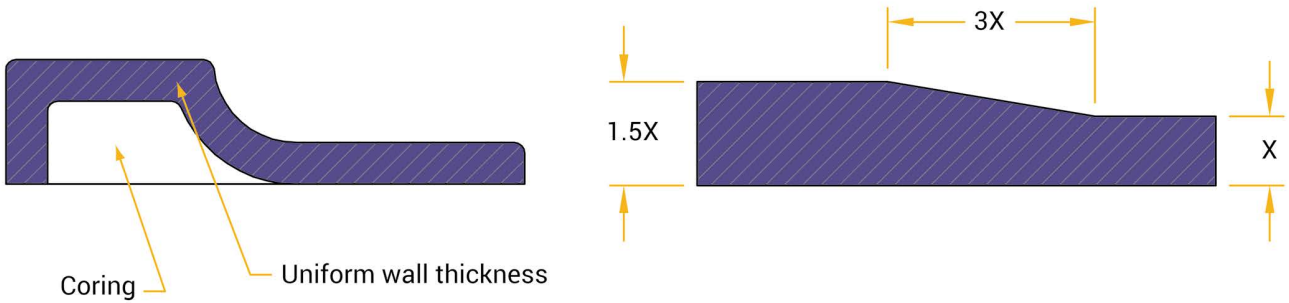
Coring
Uniform wall thickness
3X
1.5X
X

Sintering supports

During the debinding and high-temperature sintering processes, molded parts (or green parts) shrink about 20%. While the parts are shrinking and before the parts can fully sinter, the forces of gravity and friction (from shrinking) may distort the parts if they are not adequately supported. Ideally, MIM components should be designed with a large flat surface or with several component features that have a common plane. This design approach allows the use of standard or flat debinding and sintering plates of trays, and eliminates the need for custom or part specific debinding and sintering supports.

These custom or part-specific supports can be expensive to produce and represent added tooling costs for the customer. Fig. 5 illustrates a MIM component that is fully supported and placed onto a standard plate without the need for special supports.

However, if a single flat surface or plane cannot be provided, part specific debinding and sintering supports will be needed. There are various types of specialized supports that can be used. Ceramic strips are the simplest type of debinding and sintering support.

5

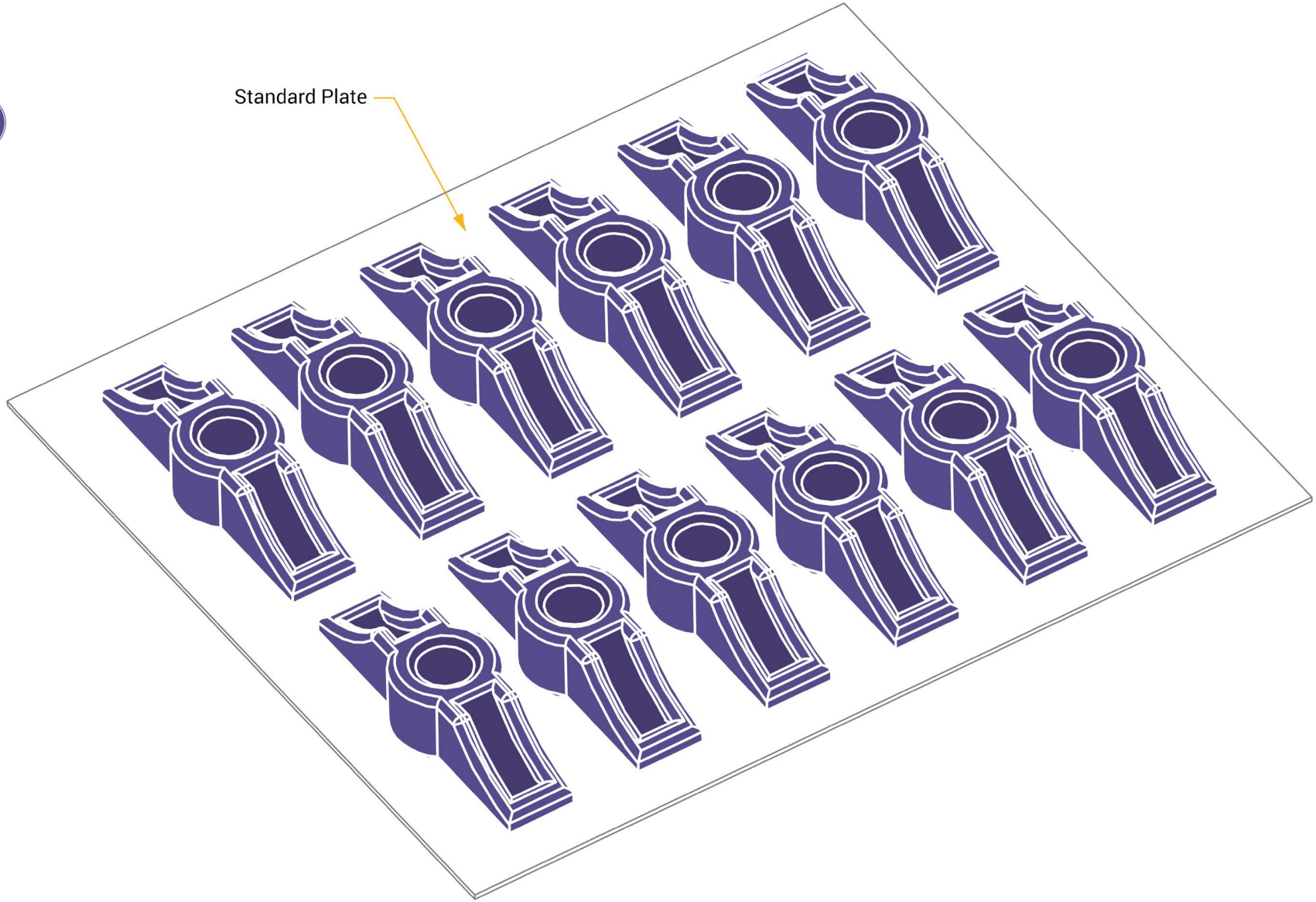

Ceramic strips

If the design permits, ceramic strips can be avoided by designing “molded-in” supports. This would eliminate the need for the additional tooling costs, but would add a non-functional feature to the component.

Fig. 6 illustrates a typical use for a ceramic strip, which is often used to support cantilevered features that could “sag” in the high temperature sintering process. The strip comes in different heights to meet the finished part’s dimensional requirements.

6

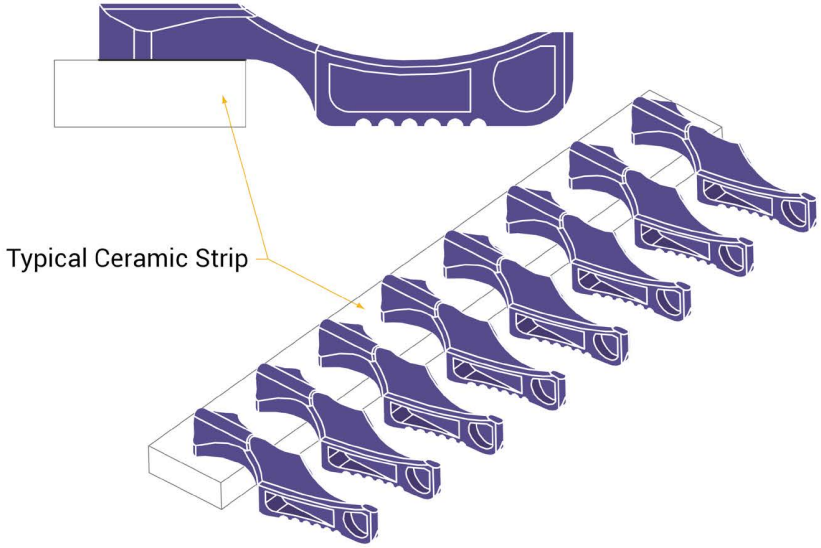
Typical Ceramic Strip

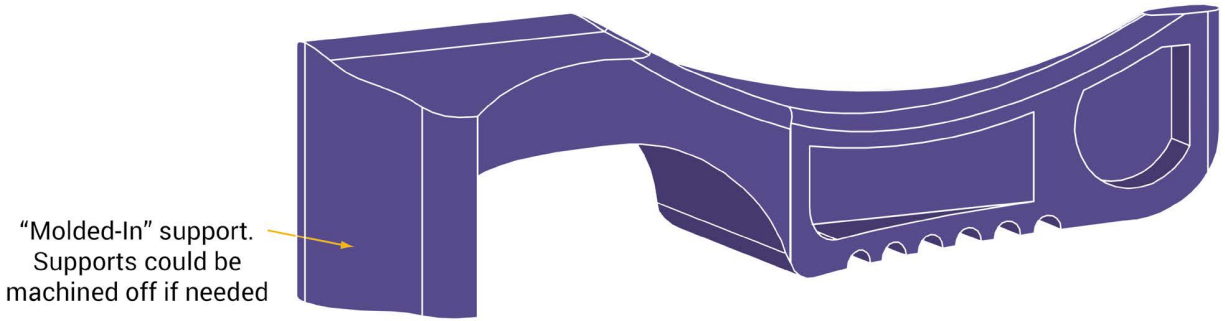
“Molded-In” support.
Supports could be
machined off if needed

Ceramic plates

Ceramic plates with machined features are more complex and costly than ceramic strips. Attempts are made to minimize the cost of these machined plates by limiting the plate features to holes or grooves. These types of support features are more expensive than simple ceramic stripes, but can fully support features that are more complex.

It is also possible to machine custom ceramic plates to support highly complex part geometries. Fig. 7 shows a MIM part that is placed on machined posts. If the part was simply placed on the thin walled legs, the legs would likely "drag" open when the part shrinks 20% during the sintering process. Placing the part upside down is not an option due to the small feature on the top.

The intent of the posts on the custom ceramic plate is to suspend the part so the bottoms of the legs are not making contact with the base of the plate. In this example, the effects of gravity can actually help keep the legs straight. This type of support plate represents one of the most expensive types of supports used by the MIM process.

7

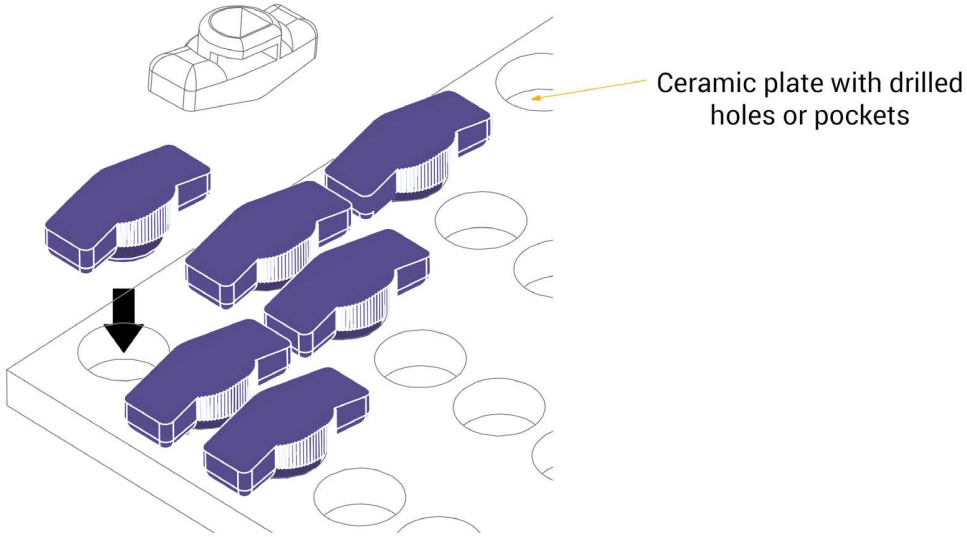
Ceramic plate with drilled holes or pockets

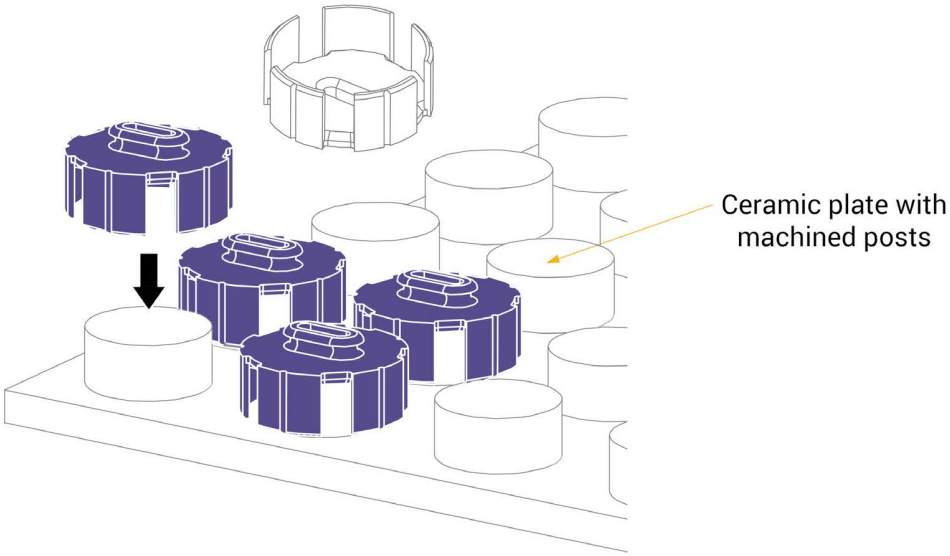
Ceramic plate with machined posts

Draft – where and when required

Generally, MIM components do not require draft. There are a couple of factors that contribute to this:

- Firstly, the MIM feedstock is highly loaded with metal powders that retain heat long after the molding cycle has been completed. Post molding shrinkage which occurs with plastic parts while they are still in the mold, occurs for MIM parts during the first several minutes after they have been removed from the mold. This allows the part to be ejected before it can cool and shrink around cores and/or other mold cavity features.
- Secondly, the polymer binder used in MIM feedstock acts as a lubricant to assist in the ejection of the part from the mold cavity. With these influences in mind, there are circumstances when draft should be provided in MIM component designs.

8

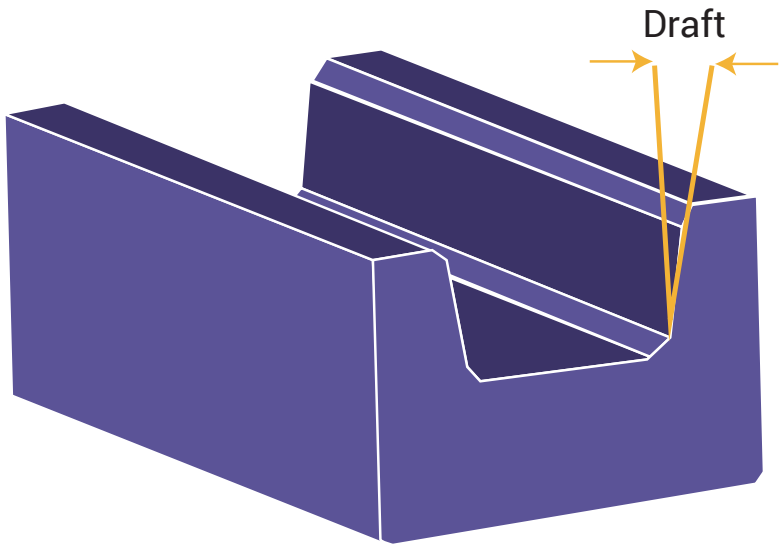

- Slight taper on internal walls
- Offsets effects of shrinkage
- Ejector pins easily push out the casting (from cavity)

Corner breaks and fillets

One of the intrinsic benefits of MIM is the ability to produce corner breaks and fillets. Not only do corner breaks and fillets play several important roles in a good MIM component design, they also provide design engineers with design advantages not readily available in some metalworking processes. In addition to providing improved injection molded part quality, these design advantages include:

- Improved part strength
- Elimination of stress concentrations
- Softening of sharp corners for aesthetics and handling

Typically, corner breaks should be kept larger .005" radius. Internal and external corner breaks less than .005" radius will induce stress concentrations in the part and will be difficult to fabricate in the mold.

9

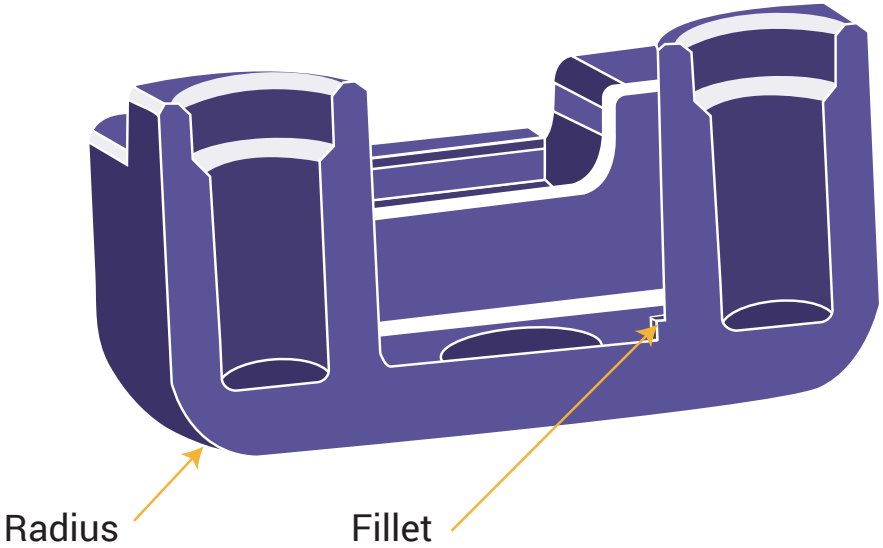

- Sharp corners should be avoided
- Design inside corners with fillets
- Design outside corners with radii
- Strengthens castings
- Improves metal flow through reduced turbulence

Fig. 10 illustrates an exception where a sharp corner is preferred over a generous radius. The figure shows a MIM component and mold design that benefits from having sharp corners located on the bottom of the part. In this case, the sharp corners allow the part geometry to be kept in one half of the mold, which simplifies the mold design, reduces the mold cost, and does not jeopardize the part's strength. Should a radius be required along the bottom edge of the part, it can be readily produced, but it should be noted that the part must now have portions of it produced in each half of the mold. In addition to adding cost to the mold, the designer should expect a witness line around the profile of the part at the parting-line location.

10

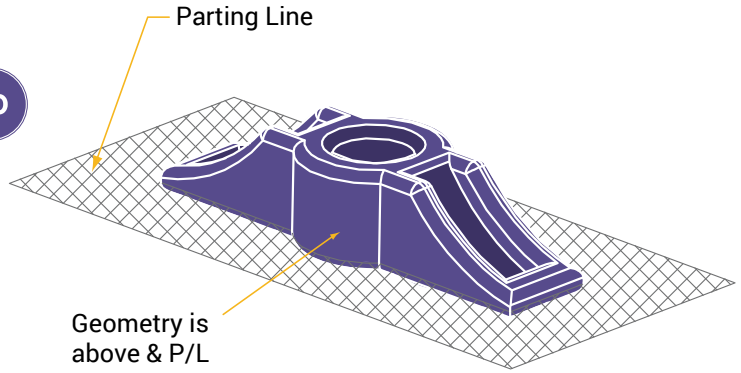
Parting Line
Geometry is
above & P/L

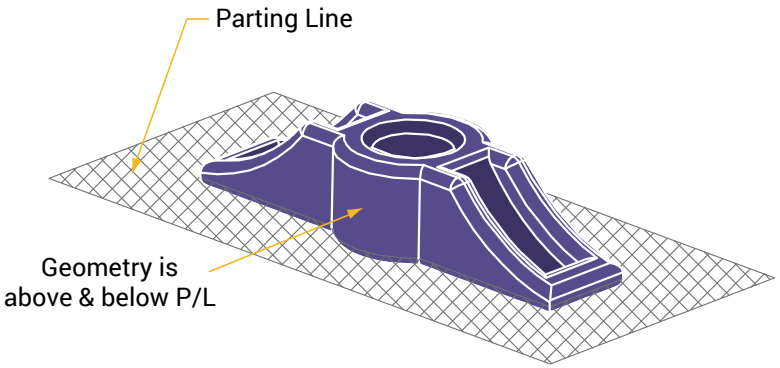
Parting Line
Geometry is
above & below P/L

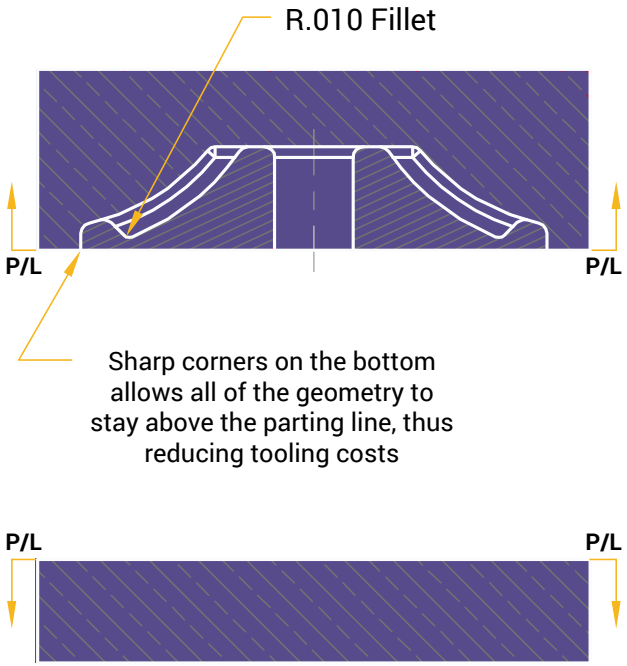
R.010 Fillet
P/L
P/L
Sharp corners on the bottom
allows all of the geometry to
stay above the parting line, thus
reducing tooling costs
P/L
P/L

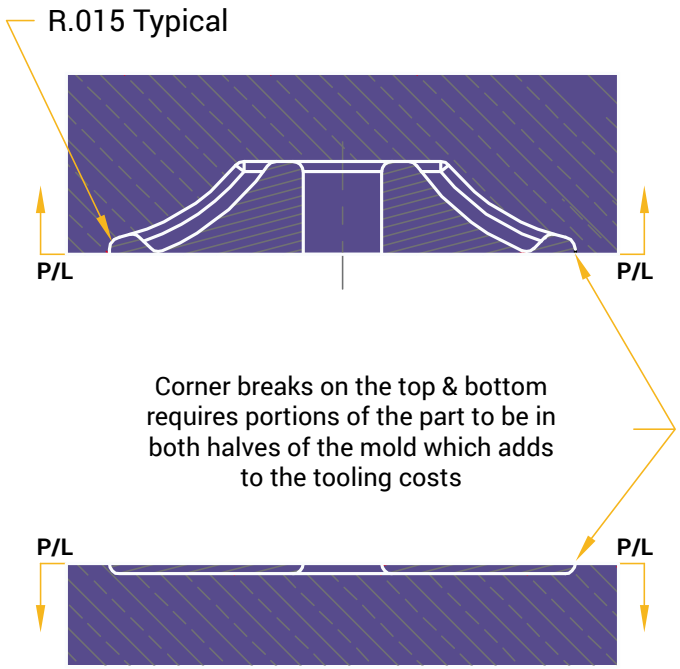
R.015 Typical
P/L
P/L
Corner breaks on the top & bottom
requires portions of the part to be in
both halves of the mold which adds
to the tooling costs
P/L
P/L

Holes and slots

Holes and slots can be easily produced by the Metal Injection Molding process and generally does not cost extra. However, adding these features does increase the cost and complexity of the mold. Also, it's important to keep in mind that beyond representing obvious functional features, holes and slots can also be used to reduce part mass and provide uniform wall thicknesses.

Type and direction of the hole

It's also important to be aware of the type and direction of a hole and how it could affect the cost and the robustness of the mold. Figure 11 shows several types of holes, their direction relative to the parting line, and their impact on the mold. Holes that are perpendicular to the parting line represent the easiest mold design approach and the lowest cost to incorporate into the mold.

Holes that are located parallel to the parting line are readily applied, but the tooling costs more than holes located perpendicular to the parting line. This is because they require mechanical slides or hydraulic cylinders to actuate them during part ejection. Holes that are set at an angle to the parting line are also possible, but the mold construction and the mechanism to actuate them becomes very expensive and in many cases the mold features result in more frequent maintenance downtime and related upkeep costs.

Cores and slots that intersect with one another can also create complex part features. However, when employing intersecting features, the mold construction and robustness must be considered. Fig. 12 shows the advantages of using a D-shaped hole as an ideal seal-off surface for an intersecting hole.

11

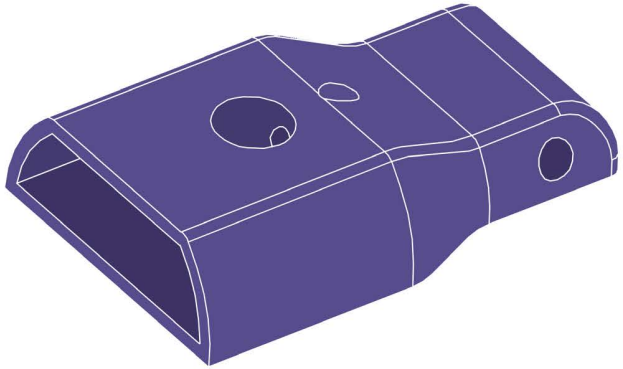

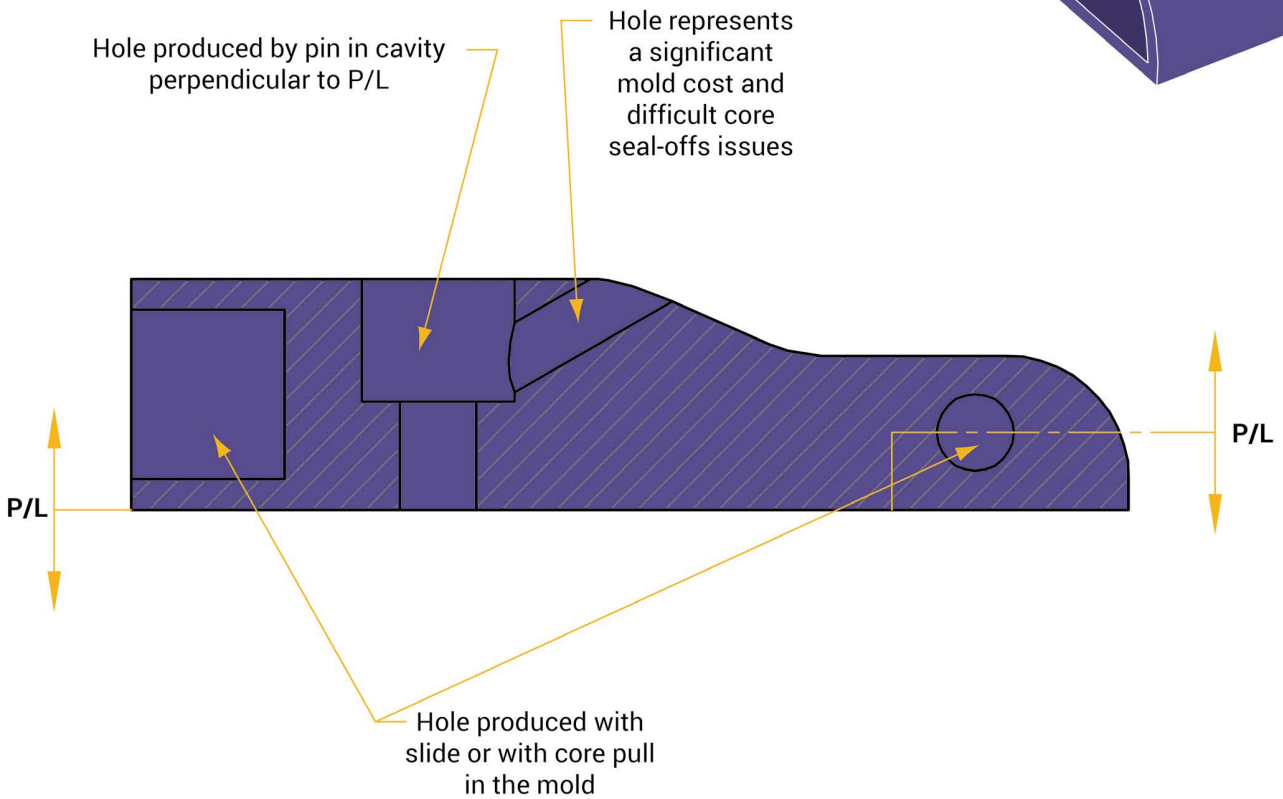
Hole produced by pin in cavity perpendicular to P/L
Hole represents a significant mold cost and difficult core seal-offs issues
P/L
P/L
Hole produced with slide or with core pull in the mold

12

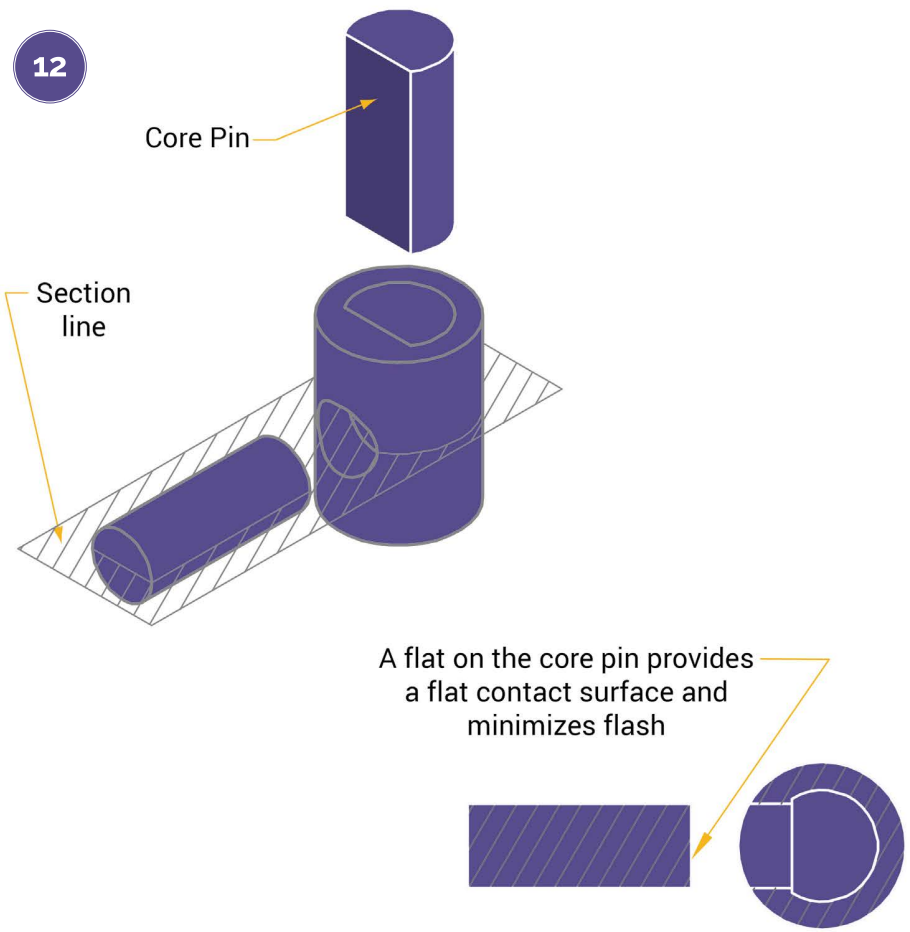
Core Pin
Section line
A flat on the core pin provides a flat contact surface and minimizes flash

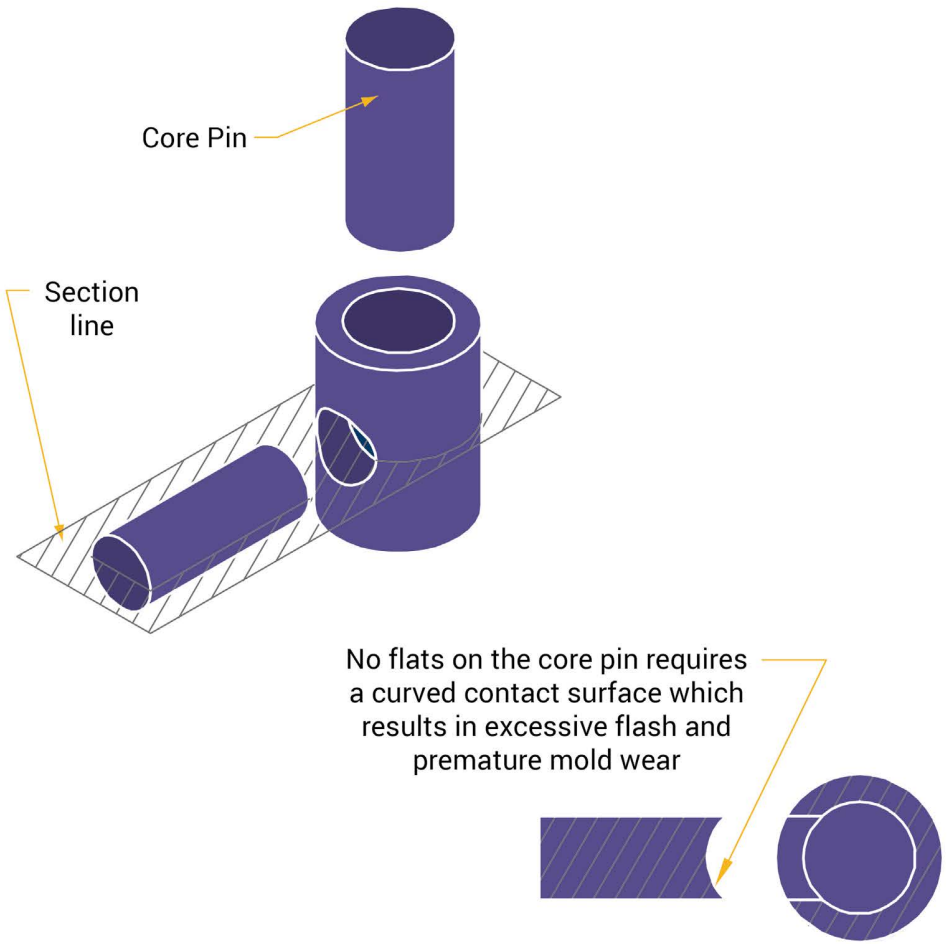
Core Pin
Section line
No flats on the core pin requires a curved contact surface which results in excessive flash and premature mold wear

In this case, two flat surfaces are sealing against one another providing a tool that will be easy to maintain and less likely to generate unacceptable flash during the molding process. The alternative displayed in the figure shows the least attractive approach, which requires one of the cores to have a contoured or profiled face to match the core or hole that it will be sealing against during the injection portion of the molding process. In circumstances like these, the core orientation is critical and the feathered edges are likely to wear more rapidly affecting the shape and size of the molded feature. Mold flash is also a concern in these situations.

Undercuts: external and internal

External undercuts can be easily produced with the MIM process. The component on the left in Fig. 13 shows an external undercut that provides relief for burrs on a mating stamped component. MIM's ability to provide the feature by placing it in the mold design eliminates the need and related cost associated with removing the burr on the stamping. Essentially the MIM part can be more complex without any associated costs. In addition, the MIM part design eliminates the need for a secondary deburring or chambering process on the stamping. Product assembly requirements should always be considered when designing components to be produced by the MIM process.

Internal undercuts are possible with MIM under the right conditions. Internal undercuts that can be produced with a mechanical or hydraulic actuated slide are easy to achieve Fig. 13 also shows a similar component, but this undercut needs the internal feature to be large enough to accommodate a robust collapsible core.

13

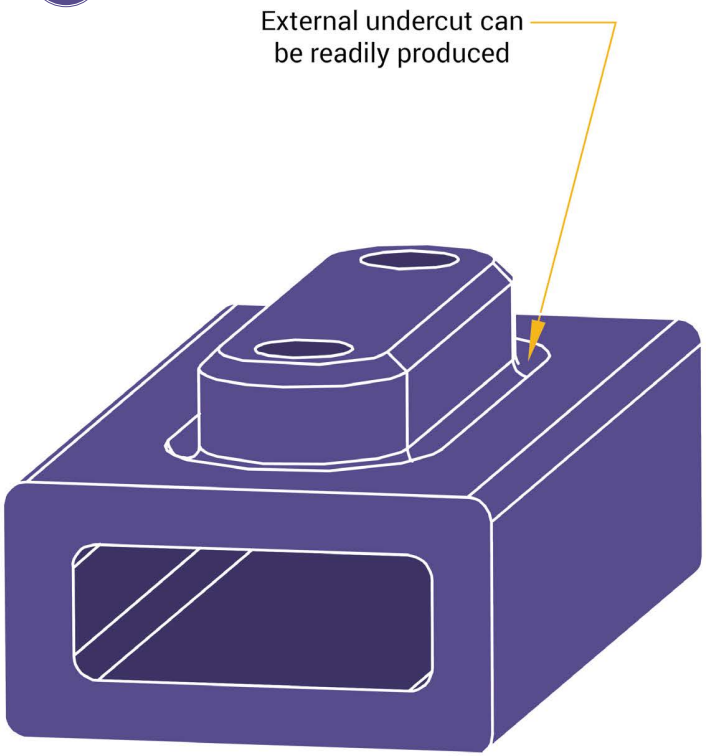
External undercut can be readily produced

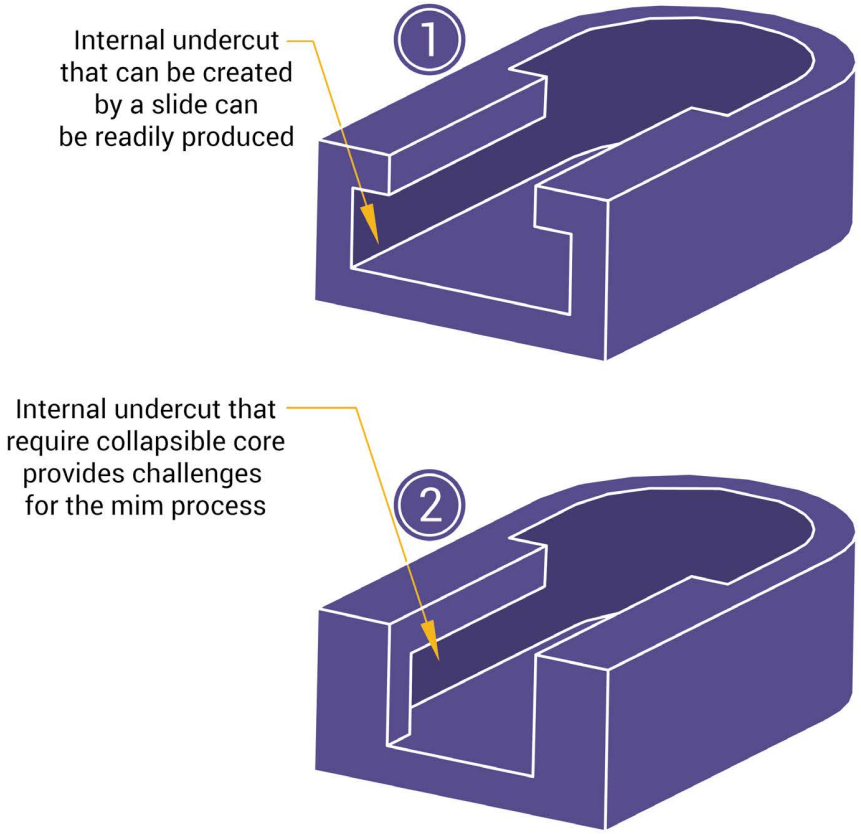
1
Internal undercut that can be created by a slide can be readily produced
2
Internal undercut that require collapsible core provides challenges for the mim process

Generally though, MIM components are small and collapsible cores are often impractical and sometimes impossible to produce. Collapsible cores also provide challenges in maintenance to minimize flash. Please seek advice from our engineers when considering such features.

Threads

Internal threads can be molded directly into the component using unscrewing cores. These mold features and functions are costly to produce, and as a result, are only utilized in high volume applications. For lower volume part applications, conventional tapping operations are preferable.

External threads can be molded directly onto the component, eliminating the need for secondary thread-forming operations. Molding external threads is almost always a more cost effective approach than forming the threads with a secondary operation. Generally, a small flat, typically .005" at the parting line should be incorporated into the design. The recessed flat, shown in Fig. 14, will ensure proper mold seal-off and reduce the opportunity for parting line vestige to interfere with component function. Without the presence of a flat along the parting line, you can expect problems with flash to develop in the root of the threads within the production of very few parts. This will likely increase tooling maintenance and down time.

14

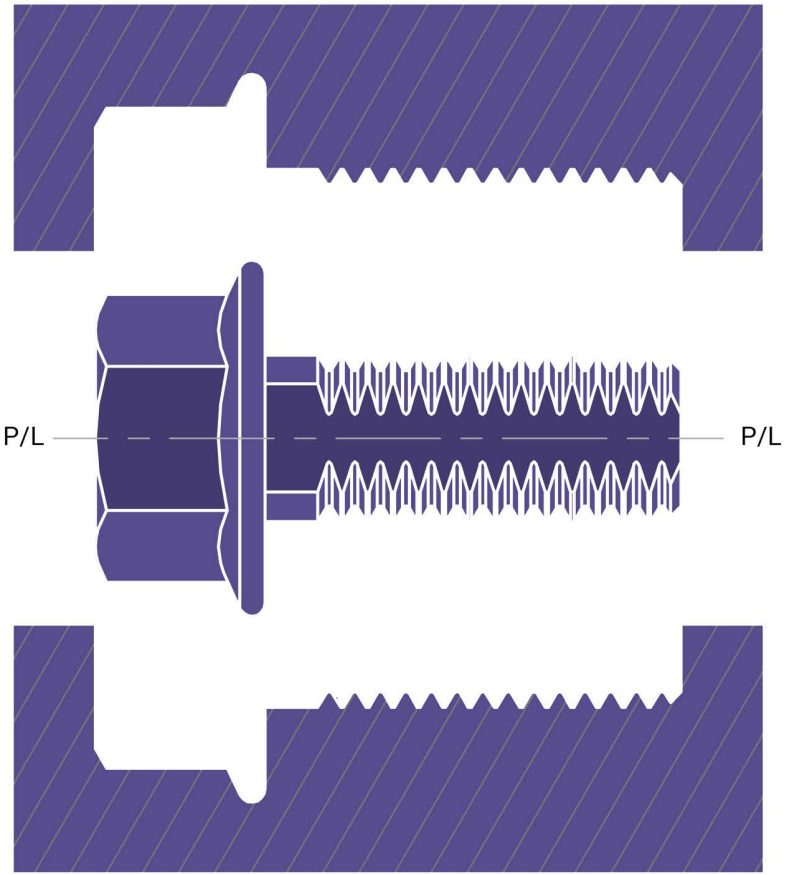
P/L
P/L

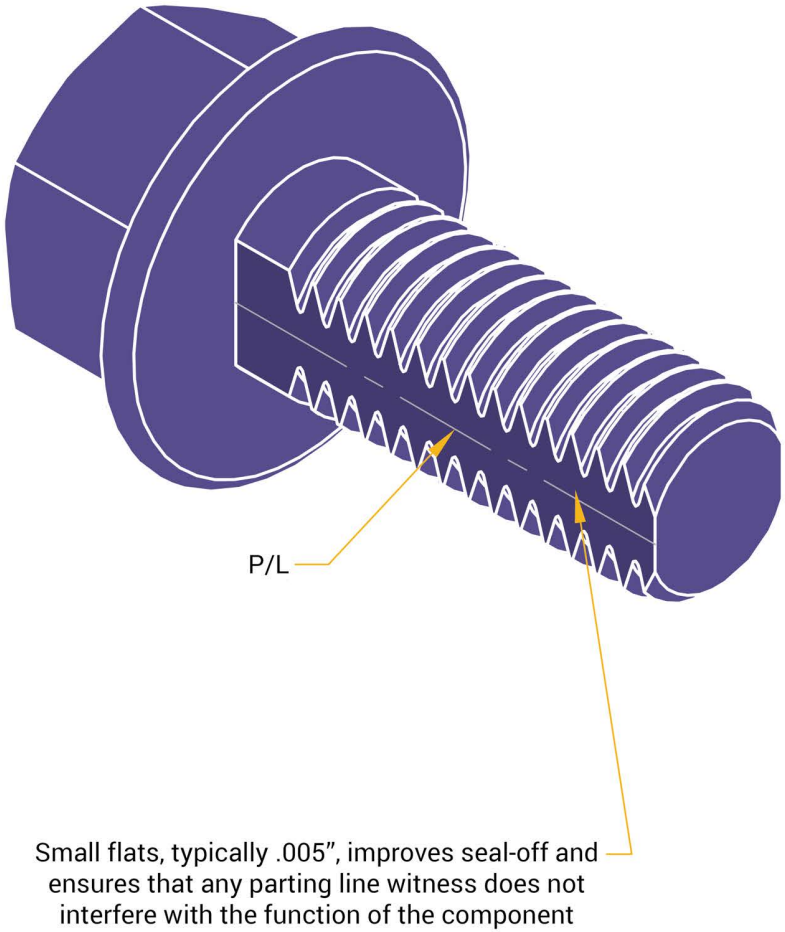
P/L
Small flats, typically .005”, improves seal-off and ensures that any parting line witness does not interfere with the function of the component

Ribs and webs

Ribs and webs are an efficient way to increase part strength, and minimize the effects of dimensional variation caused by the substantial shrinkage occurring during debinding and sintering. As with plastic injection molding, ribs and webs also improve the molding process and provide better dimensional control. Fig. 15 shows how ribs and webs can be added to improve the mechanical design and provide a more robust MIM component.

Another application of ribs is where they are used as a means to provide coring for part mass reduction without affecting the intended end use or strength of the component.

15

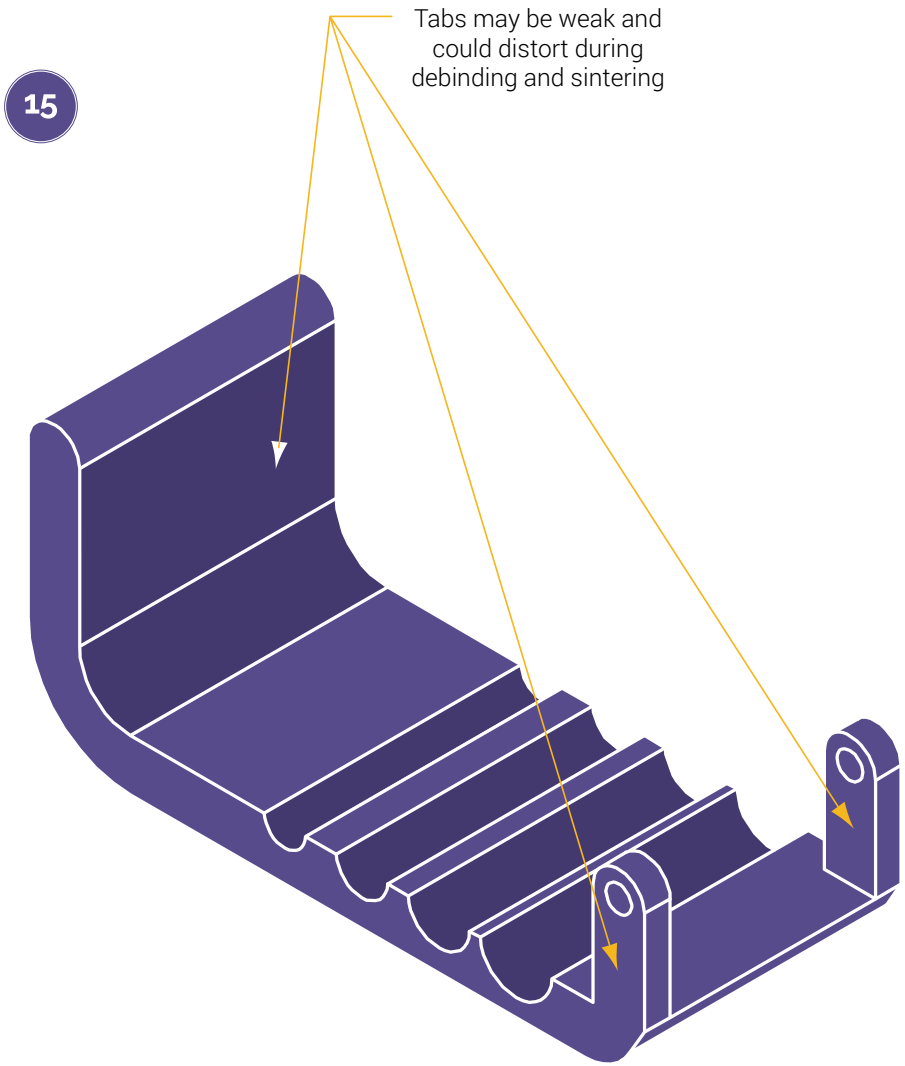
Tabs may be weak and could distort during debinding and sintering

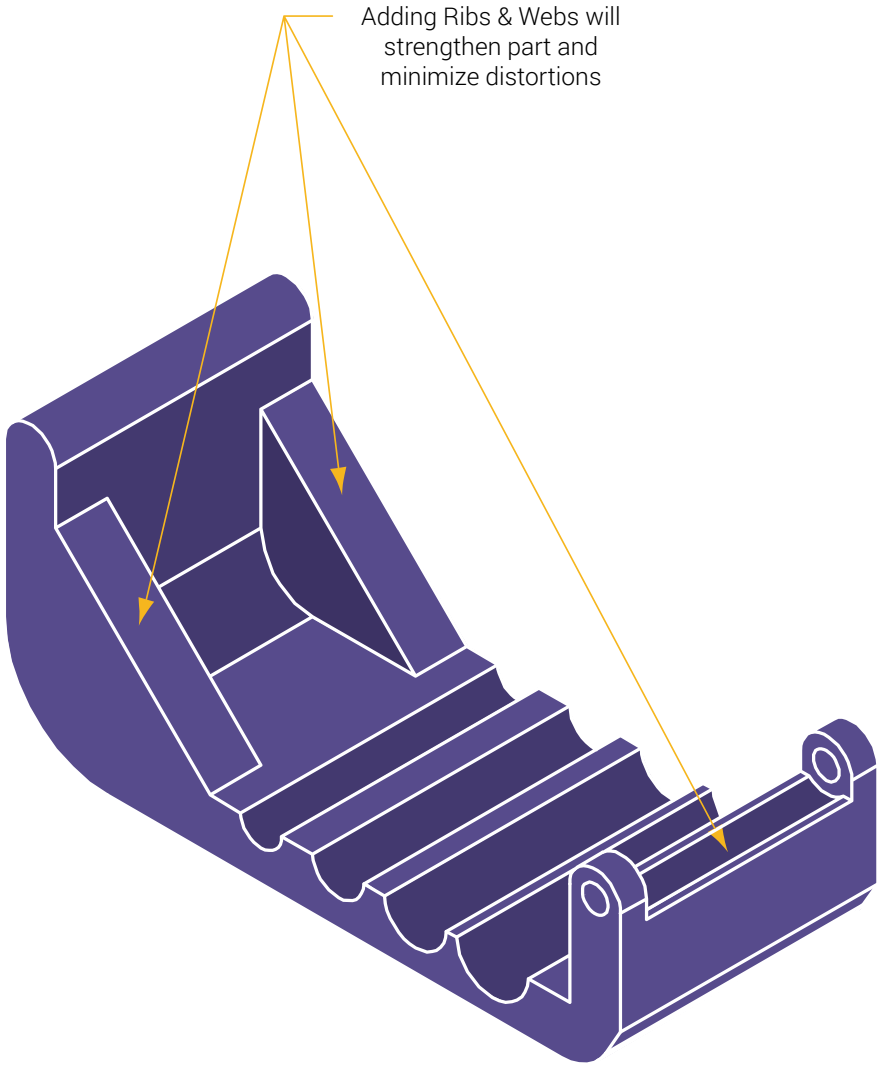
Adding Ribs & Webs will strengthen part and minimize distortions

Knurling, lettering, and logos

MIM is also capable of producing knurling, lettering, logos, date coding, or other designs directly onto the component without added costs to the piece price. These features can either be raised or sub-surface. Fig. 16 depicts an example of this. MIM provides high levels of feature detail, including relatively sharp diamond knurling. Virtually any feature you can imagine molding is possible in solid metal parts with the MIM process.

16

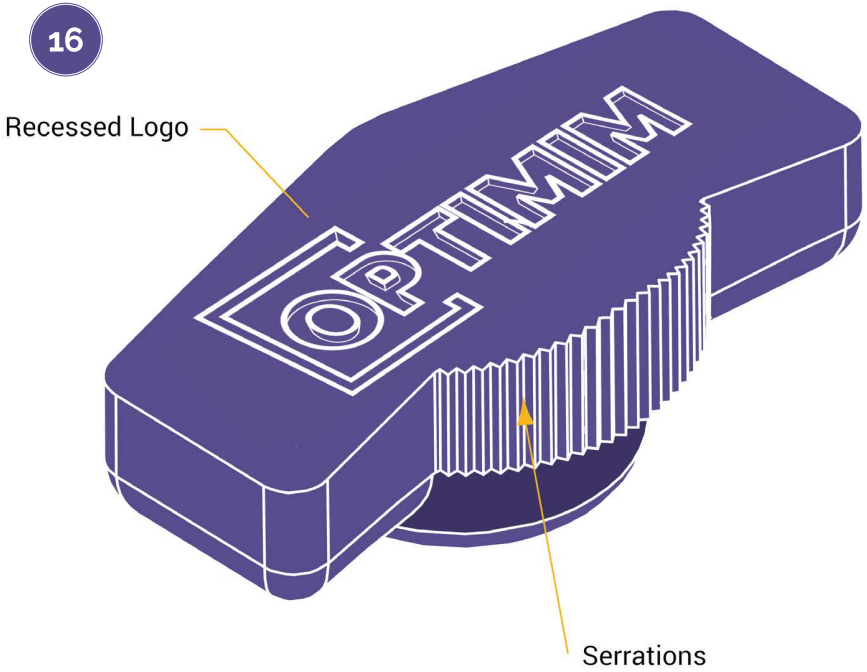
Recessed Logo
OPTIMM
Serrations

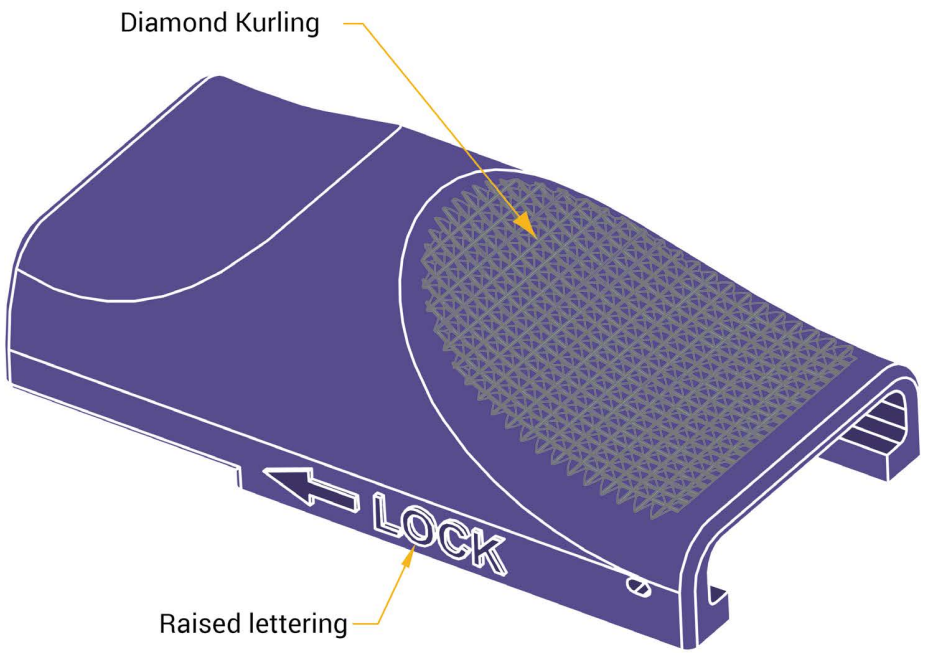
Diamond Kurling
LOCK
Raised lettering

Gating: Types & Locations

In most cases, gates are located at the parting line of the mold. The impact of the gate location on the component must be considered during the design phase, as it can be a careful balance between manufacturability, part function, dimensional control, and aesthetics. Gates will leave a slight vestige, and should not be located on a dimensionally or a visually critical surface.

Fig.17 shows an illustration of an edge gate. In general, the gate is placed at the thickest cross-section to allow the material to flow from thick to thin cross-sections. Additionally, the location of the gate(s) should be placed to allow uniform filling of the mold cavity.

The following characteristics are typical for an edge gate:

- Gates are typically removed manually and are not suited for high annual volume applications.
- Suited for low to medium annual volume applications.
- Recessed gates are preferred to minimize vestige above functional component surfaces.
- Normally located along the parting line.

17

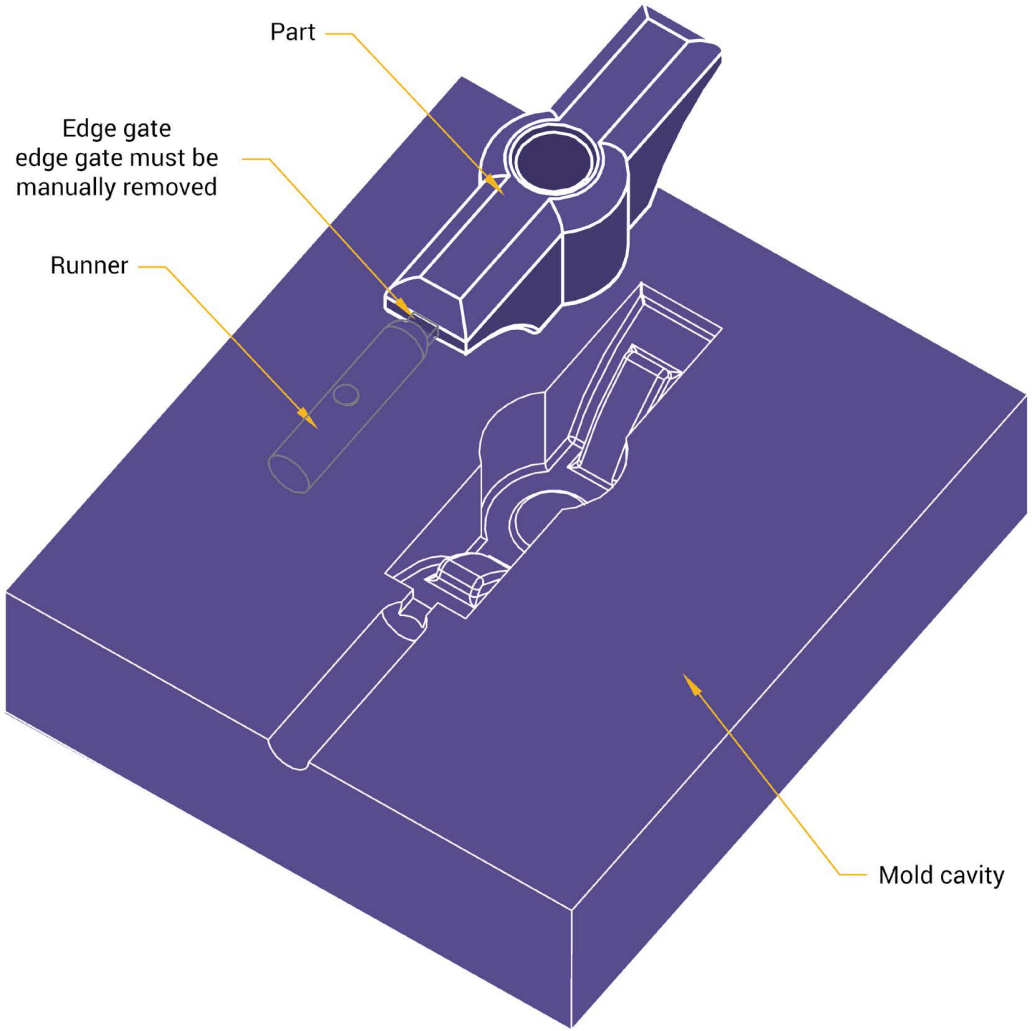
Part
Edge gate
edge gate must be
manually removed
Runner
Mold cavity

Fig.18 shows a submarine or sub-gate, which has the following characteristics:

- The gate is automatically sheared off from the part during the part ejection portion of the molding process.
- Suited for low to high annual volume applications.
- Leaves minimal gate vestige or breaks off below the surrounding component surface.
- Sub-gates should be placed on a recessed surface to minimize vestige above functional component surfaces.

18

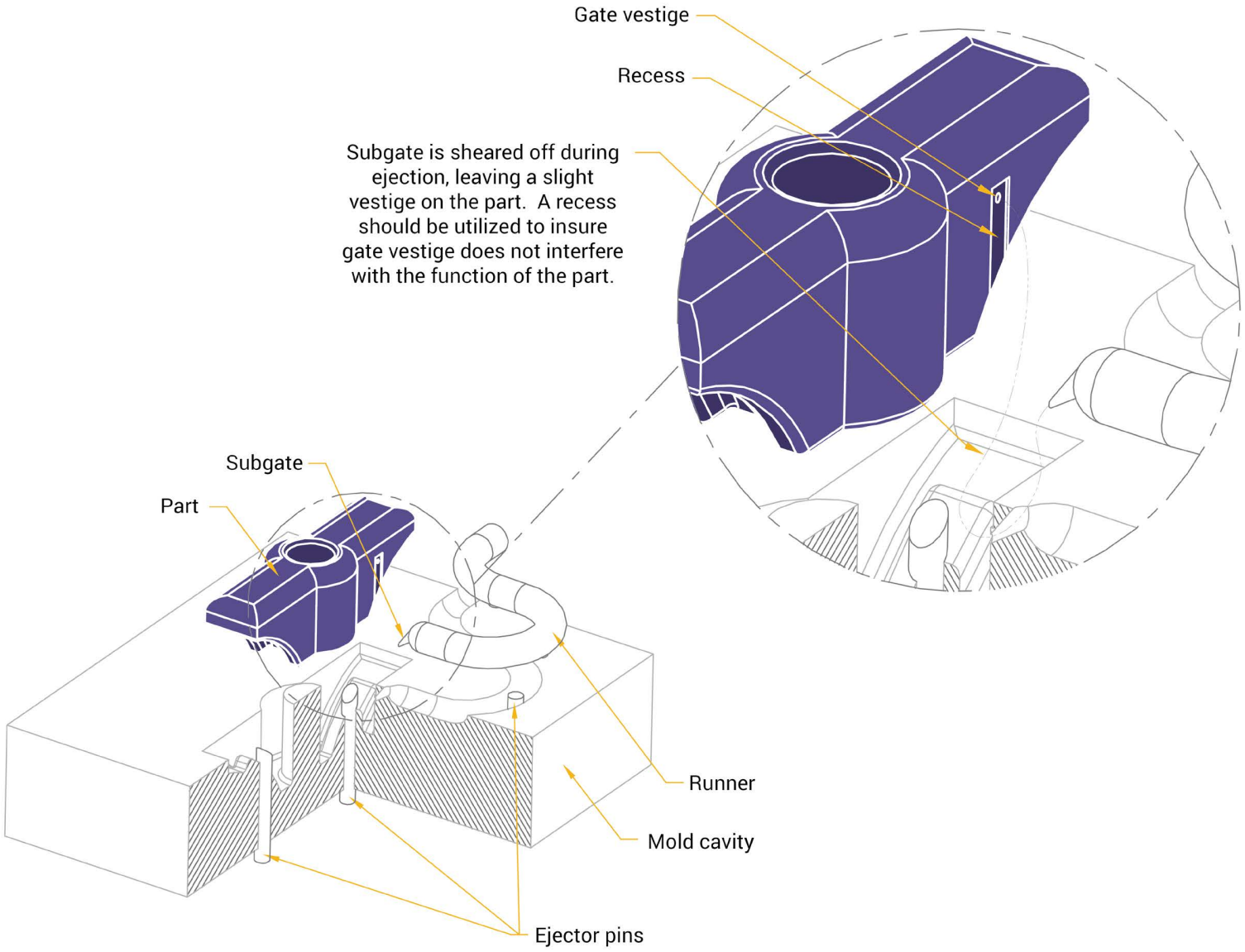
Gate vestige
Recess
Subgate is sheared off during ejection, leaving a slight vestige on the part. A recess should be utilized to insure gate vestige does not interfere with the function of the part.
Subgate
Part
Runner
Mold cavity
Ejector pins

Fig. 19 illustrates a submarine or sub-gate to a removable post. This gating approach has the following characteristics:

- The gate is automatically sheared off from the post during the part ejection portion of the molding process.
- The post is removed after the part is out of the mold, and this removal process is not typically automated.
- The post is preferably located in a recessed pocket on the MIM component so the post can be broken off below the component surface.
- Suited for low to medium annual volumes.
- The post and related recess or pocket should be located on a non-cosmetic surface.

Other gating techniques common to plastic injection molding can also be applied to MIM parts including, 3-plate molds with direct gating, and hot-runner systems for direct gating. Generally, any technique utilized in plastic injection molding can be applied to the MIM process.

19

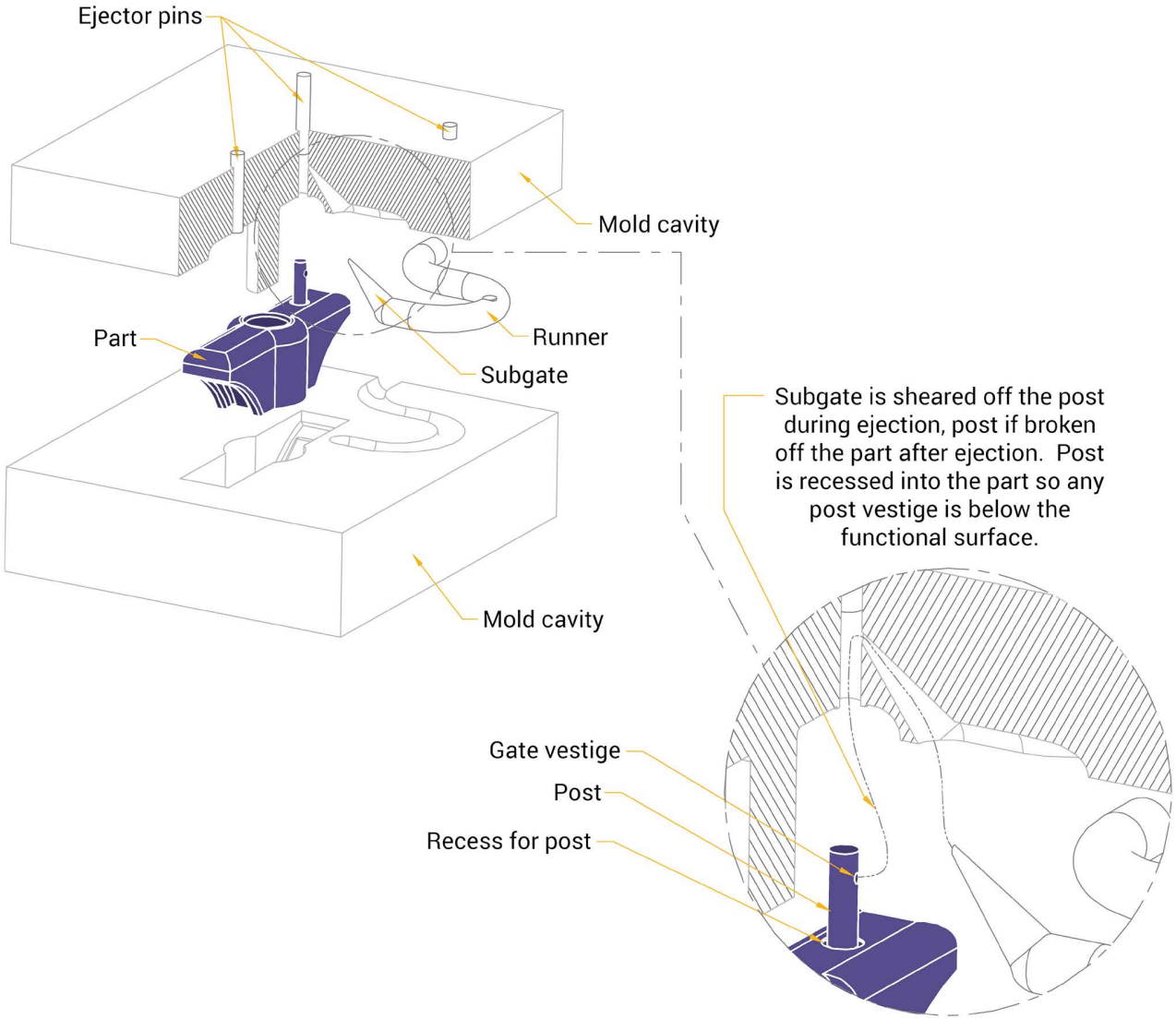
Ejector pins
Mold cavity
Part
Runner
Subgate
Mold cavity
Subgate is sheared off the post during ejection, post if broken off the part after ejection. Post is recessed into the part so any post vestige is below the functional surface.
Gate vestige
Post
Recess for post

Sink and knitlines

Similar to a plastic injection molded part, a MIM part may contain sinks and knit-lines caused by improper part and mold design. Sink (a physical depression on the surface of a part) frequently occurs around thicker sections.

The example shown in Fig. 20 illustrates how sink can occur when a supporting rib intersects a wall. If the rib is the same thickness as the wall, the intersection of the two, creates a localized thick wall and is susceptible to sink. Decreasing the thickness of the supporting rib eliminates or reduces the potential for sinks. Generally, the thickness of the rib should be about 75% of the thickness of the wall.

Knit-lines can occur when two flow paths of material meet in the cavity when the flow path is relatively long. Fig. 21 shows a knit-line occurring in a cylindrical part with a core in the center and a single gate. The two flow paths have to go around the core before meeting on the opposite side. Due to the long flow path, the two flow fronts of material have cooled down, which creates a visually evident knit-line. Fig. 21 also shows how dual gating the part can substantially reduce, and at times, eliminate visible knit-lines.

You should keep in mind that visually negligible knit-lines on properly designed MIM parts are superficial and do not represent a structural defect or part performance issue. Generally, knit-lines of this type have a shallow witness that is a little as .0005” deep to .005” deep.

20

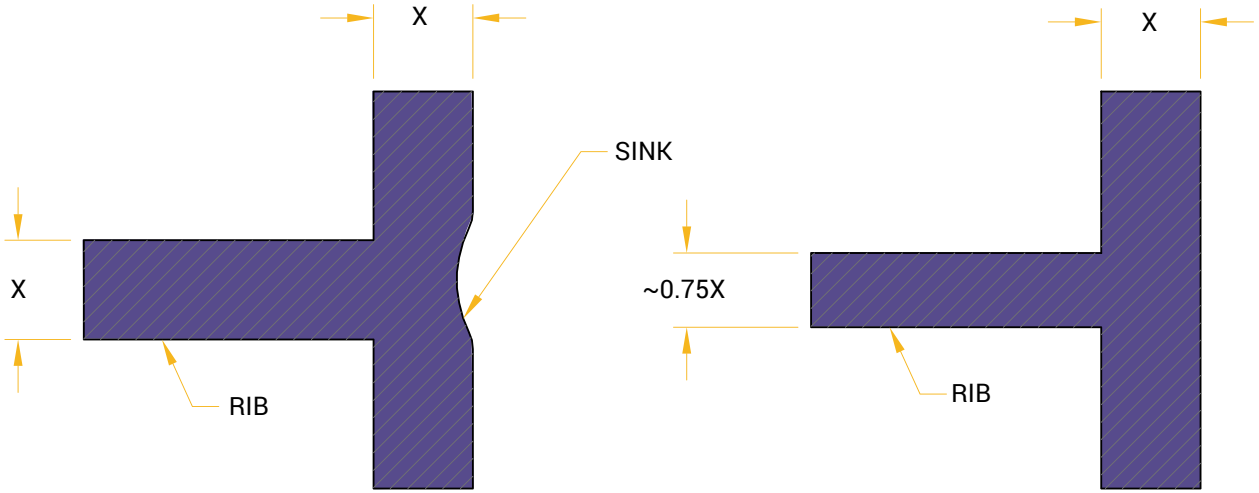

21

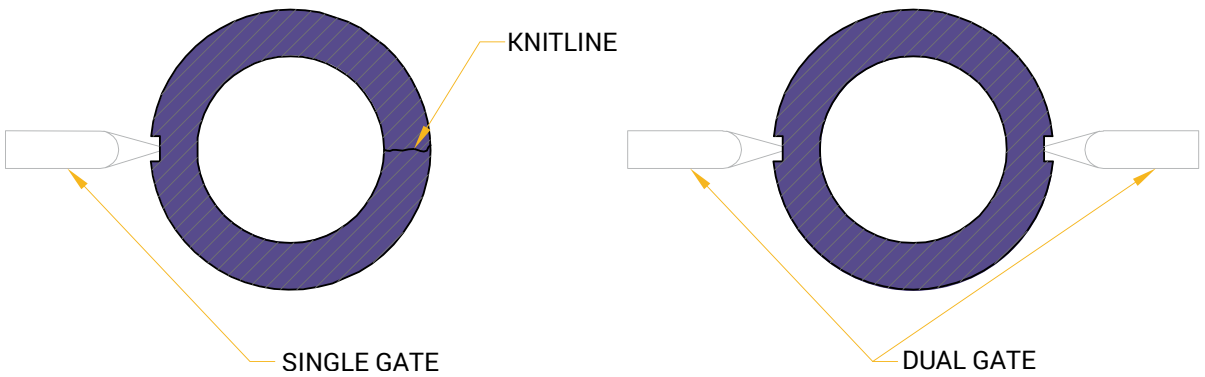

Minimum and maximum wall thickness

The minimum or maximum cross sectional wall thickness on any part is very much dependent on the overall part size and design. The most important issue to keep in mind is the ability to fill the part during the molding step of the MIM process. As an example, a 0.010" wall thickness may be possible if it's localized, but is not possible if it is across the entire length of a 4" long part. Generally, the optimum wall thickness is 0.040" to 0.120" and again, it's related to the overall size of the part.

Minimizing wall thickness also reduces the material content of a part and its cost. Fig. 22 shows a MIM part with a small pocket with a thin wall. The figure illustrates a general guideline of the minimum wall thickness possible, depending on the size of the pocket.

At the other end of the spectrum, wall thicknesses as large as 0.500" are possible, but as the wall thickness increases, so does the molding process cycle time, material consumption, debinding and sintering cycles. Each of these increases represents an increase in the part cost.

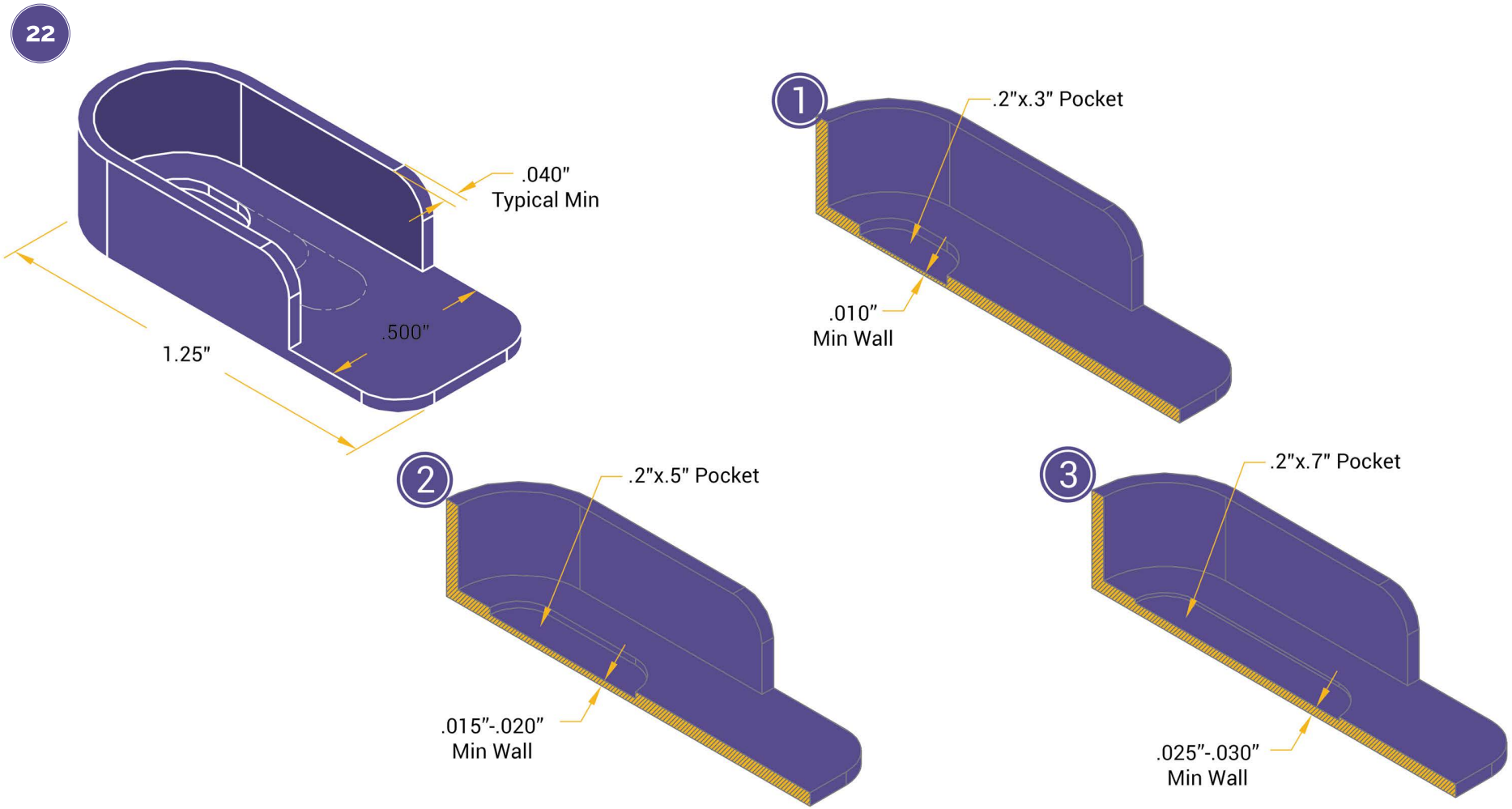
22
.040"
Typical Min
.500"
1.25"
1
.2"x.3" Pocket
.010"
Min Wall
2
.2"x.5" Pocket
.015"-.020"
Min Wall
3
.2"x.7" Pocket
.025"-.030"
Min Wall

Flash and witness lines

When designing a MIM component, witness lines and areas of potential flash should be taken into consideration. Critical areas from both an aesthetic and functional standpoint should be assessed for possible effects of witness lines or for minimizing the potential for flash.

It should be noted that MIM feedstock tends to flash more readily than most plastic materials, and as a result, MIM molds require very precise fits between each of the mold components such as slides, cores, and parting line. Remember, flash generated on a MIM part becomes a metal burr after sintering and is difficult to remove.

Witness lines are an unavoidable result of two mating mold components. Whether along a parting line, or where a core pin seals off against a slide or other mold feature, injection molded material under pressure will be imprinted with the witness mark of two pieces of steel meeting one another.

Fig. 23 illustrates the typical witness line to be expected along a parting line. In this example, the parting line is just above the fillet and the part will have a witness mark all around the part at that point. The witness line can often be minimized or removed with a secondary tumbling operation.

23

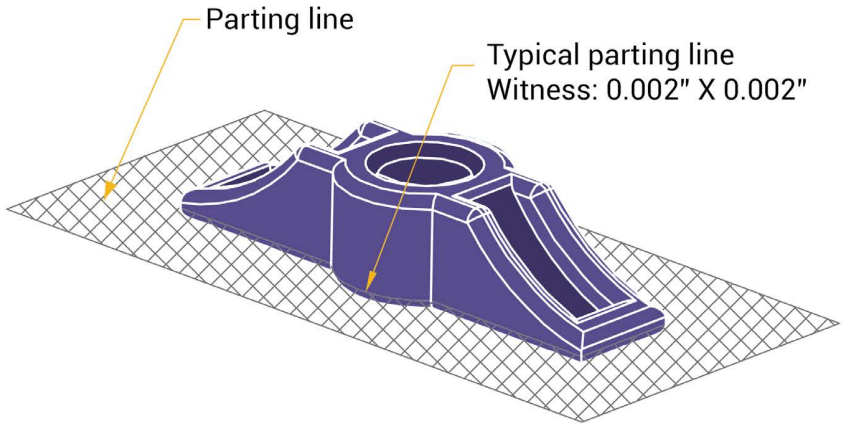
Parting line
Typical parting line
Witness: 0.002" X 0.002"

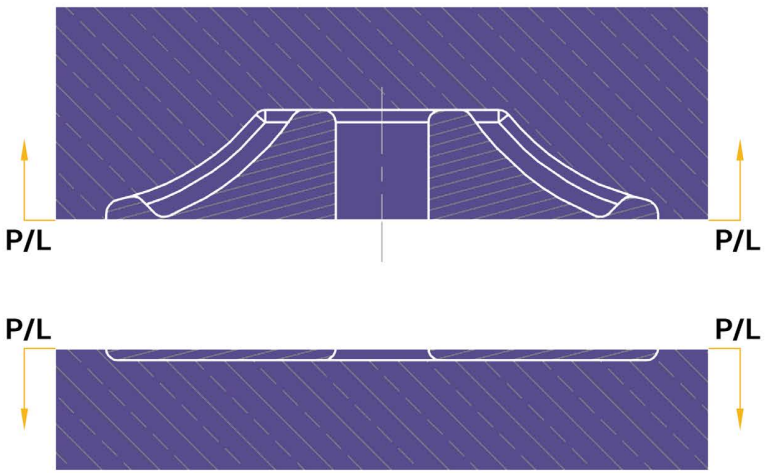
P/L
P/L
P/L
P/L

As discussed in the Corner Breaks and Fillets section of this design guide, if the bottom fillet is not needed and a sharp corner can be tolerated, the full part geometry can be kept in the upper half the mold. This will move the parting line to the bottom of the part and no witness line will be present. A tumbling operation can also be performed which will give the part a slight corner break as an alternative to containing the part geometry in both mold halves in order to accommodate a radius along the edge of the part.

How to avoid flash

The potential for flash will always exist and in many cases the construction of the mold plays a big role in minimizing this potential. However, there are design actions that can be taken that will improve the robustness of the mold, thereby decreasing the chances of flash on the part.
One major way for avoiding flash is to have "flat-on-flat", contact for the mold seal-off features. Fig. 24 shows how an intersection of two holes can be redesigned to reduce the potential of flash using a D-shaped hole as an ideal seal-off surface for the intersecting hole.

In this case, two flat surfaces are sealing against one another providing a tool that will be easy to maintain and less likely to generate unacceptable flash during the molding process. The alternative displayed in the figure shows the least attractive approach, which requires one of the cores to have a contoured or profiled face to match the core or hole that it will be sealing against during the injection portion of the molding process.
In circumstances like these, the core orientation is critical and the feathered edges are likely to wear more rapidly affecting the shape and size of the molded feature. Mold flash is also a concern in these situations.

24

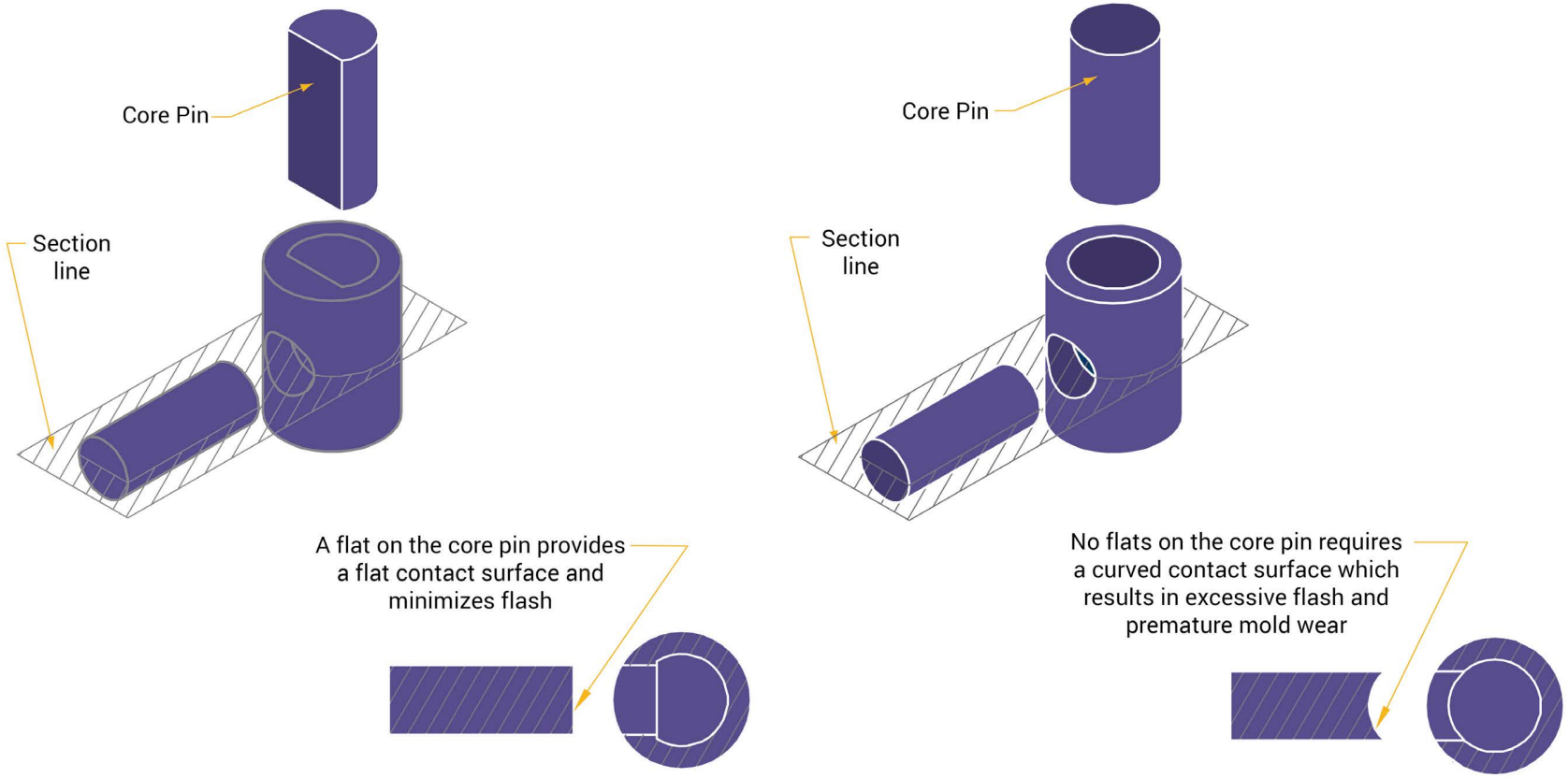
Core Pin
Section line
A flat on the core pin provides a flat contact surface and minimizes flash
Core Pin
Section line
No flats on the core pin requires a curved contact surface which results in excessive flash and premature mold wear

Whenever possible, areas of potential flash and/or witness lines are moved away from critical areas. In the circumstances where this is not possible, there may be alternatives to ensure any witness lines and/or flash does not interfere with the function of the part. Fig. 25 illustrates one of these alternatives. On a cylindrical component with an external undercut, the parting line would run lengthwise, down the center of the part. To avoid a situation where any witness on the O.D. could interfere with the function of the component, small flats are added along the parting line to ensure that any witness line and/or flash would occur below the functional diameter of the part.

25

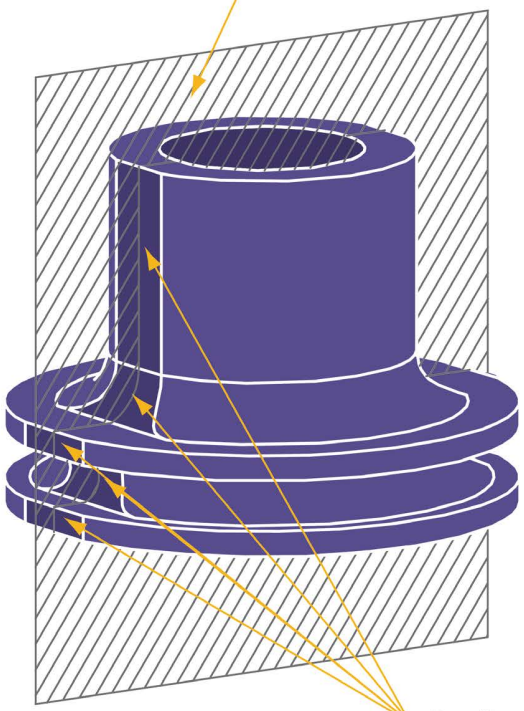
Parting Line
Partling line flats ensures that any parting line witness and/or flash does not interfere with function of the part

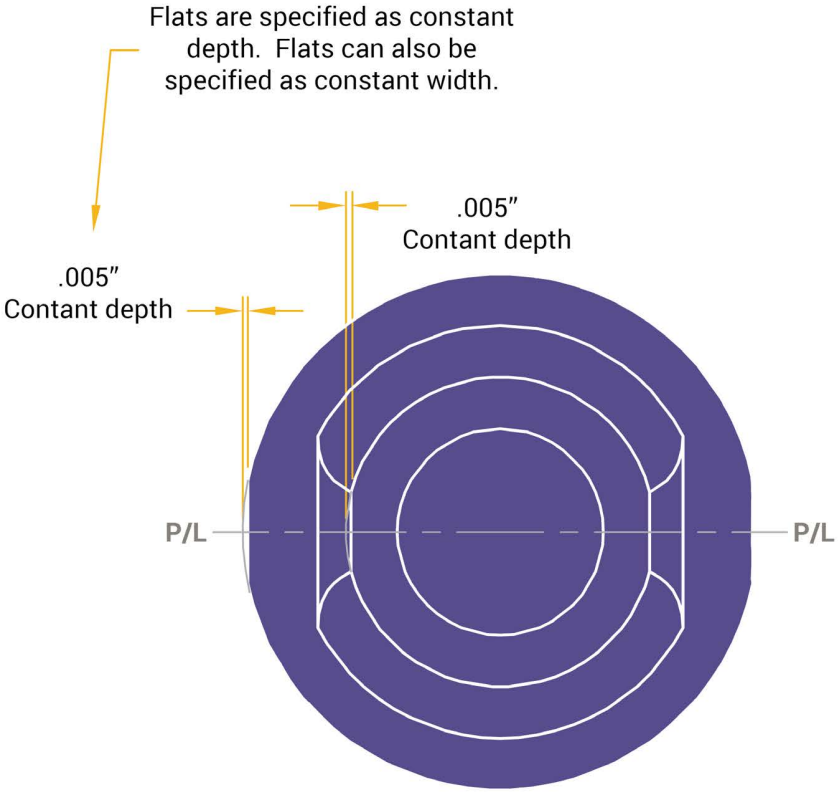
Flats are specified as constant depth. Flats can also be specified as constant width.
.005"
Contant depth
.005"
Contant depth
P/L
P/L

Interchangeable mold inserts

Multiple parts that have only minor variations between them may be produced using interchangeable mold inserts. All common features are produced by the cavity, but the unique feature is produced with an insert that can be pulled out and replaced with another insert containing an alternative feature. Fig. 26 illustrates a mold with interchangeable inserts to produce two different parts. Sharing a common mold and utilizing inserts minimizes the tooling fabrication needed, providing tooling cost savings.

As with any metal-to-metal seal-off areas, there will be a slight witness mark on the part and this should be taken into consideration during the design stage.

It should also be noted that interchangeable inserts can generally be accommodated on low to medium volume parts, but high annual volume applications are normally better served with independent molds for each part design configuration.

26

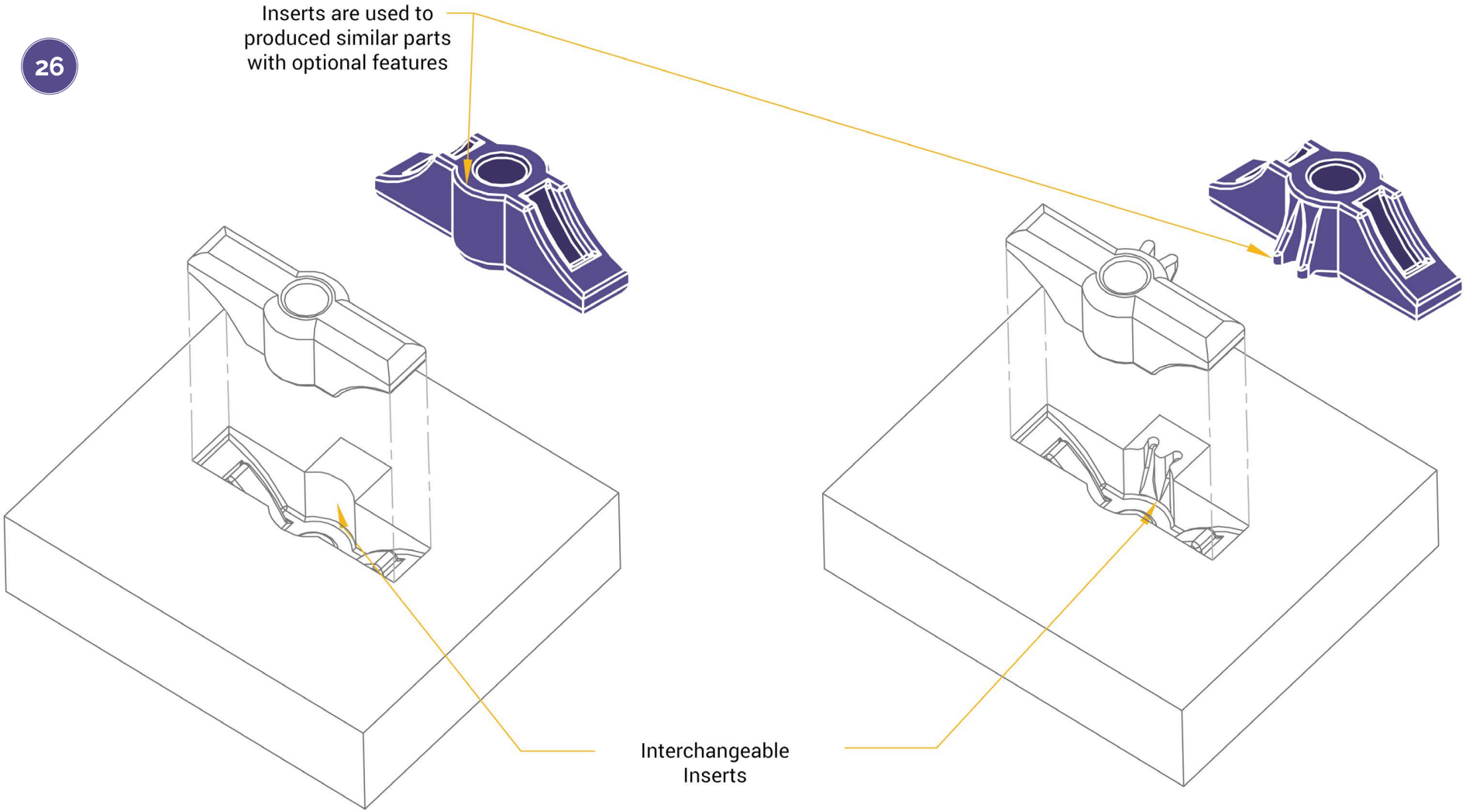
Inserts are used to
produced similar parts
with optional features
Interchangeable
Inserts

DIMENSIONAL TOLERANCES

As a starting basis, MIM is capable of as-sintered tolerances of: +/- 0.3% of nominal (i.e. 1.000” +/- .003”)

This compares to the investment casting process with tolerances of: +/- 0.5% of nominal (i.e. 1000”+/- .005”)

DIMENSIONAL TOLERANCES

The exact tolerance capability on any feature is influenced by a variety of variables that are inherent in the MIM process. The resulting tolerance capability may be less than +/- 0.3% noted above or greater in some cases. Variables such as part design, size, shape, material, gate location, number of cavities and, mold constructions techniques need to be taken into consideration. The material chemistry selected for your application can have a greater effect on tolerances.

Not all materials produce the same tolerance results. Gauging or inspection requirements are an integral element of a component design and could have a heavy influence on tolerance capabilities. It has been our experience that theoretical intersections, center of radii, and very small features require larger percentage tolerances due to gauge resolution, repeatability, and capability limitations.

Fig.27 shows examples of the typical tolerance requirements for a MIM component without the need for secondary operations.

Depending on component geometry, flatness and straightness, specifications of down to .001 inch-per-inch are achievable. This is especially true if the entire critical surface can be supported during debinding and sintering, or the critical feature is perpendicular to the supported surface, Gate location, cross-sectional thickness, and cross-sectional geometry have an effect on the resulting straightness or flatness.

27

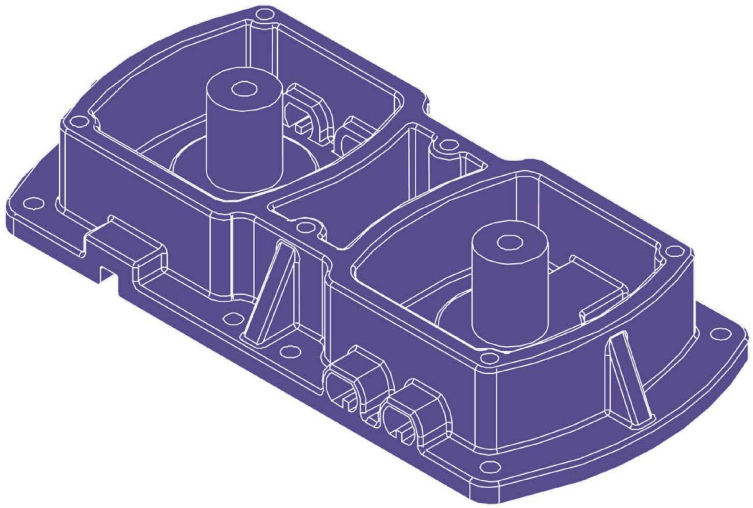

01.935

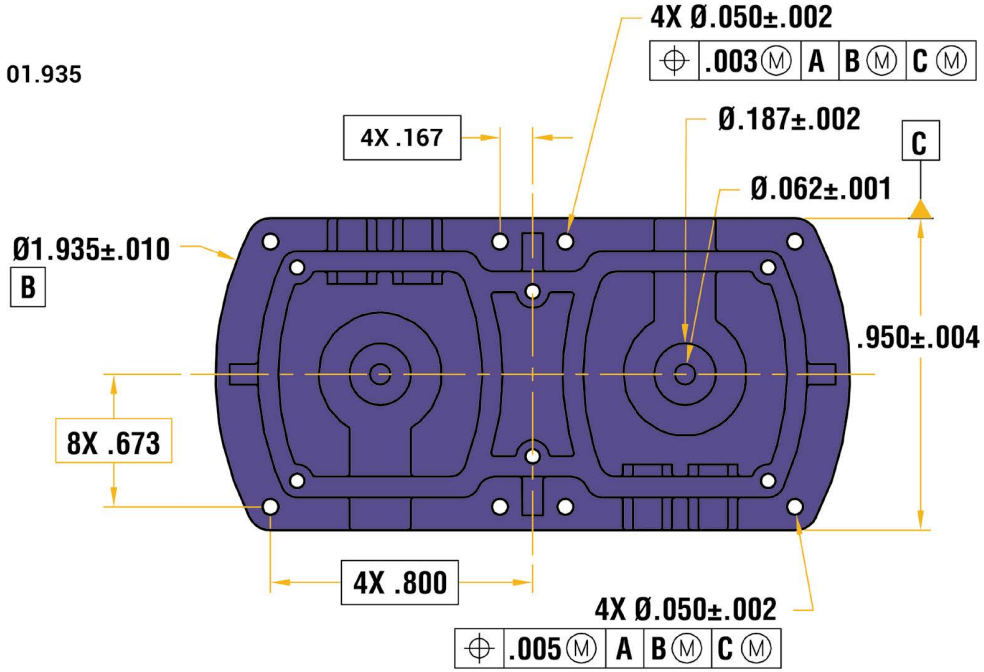
4X Ø.050±.002
.003 M A B M C M
4X .167
Ø.187±.002
C
Ø.062±.001
Ø1.935±.010
B
.950±.004
8X .673
4X .800
4X Ø.050±.002
.005 M A B M C M